

OPERATION MANUAL

EN | Original

MU-FM Vario

FROM SERIES	2024
EDITION	04.2025
ORDER CODE	P_FMV_BA_24_ENG

Machine identification

In order for your dealer to assist you as efficiently as possible, you will need to provide some information about your machine.
Please enter the information here.

Designation	
Working width	
Weight	
Machine number	
Additional equipment	
Dealer's address	
Manufacturer's address	Müthing GmbH & Co. KG Soest Am Silberg 23 59494 Soest Germany

The copyright and usage rights are owned by Müthing GmbH & Co. KG Soest. Reproduction, transfer to other media, translation or the use of extracts or parts of this manual without the explicit permission of Müthing GmbH & Co. KG Soest , is not permitted. All rights reserved. The contents of this operating manual are subject to change without notice. Technical changes reserved.

Handover declaration

– Fill out this sheet with your dealer.
– Then separate this sheet from the operating manual and send it to the manufacturer within 2 weeks of delivery. Only in this way will the guarantee be effective from the date of delivery

To
Müthing GmbH & Co. KG Soest
Am Silberg 23
59494 Soest
Germany

I have bought the machine described below and confirm full delivery and handover of the machine including the operating manual and spare parts list, as well as training in operating the devices with safety instructions and warning information from your dealer.

I confirm additionally that I have read and understood the operating manual and am in agreement with the information contained therein. This applies in particular to the chapter Safety.

Client

Name		First name	
Address			
Post code		Town/city	
Telephone		Fax	
E-mail		Date	

Machine

Machine	MU-	Serial number	
Working width		Gear-box	
Rigid mount-ing		Non-rigid mounting	
Year of con-struction		Delivery date	
Delivered by			

Signature of client

Signature and stamp of sales partner

Handover declaration

Handover declaration – Copy

– This sheet remains with the client in the operating manual

I have bought the machine described below and confirm full delivery and handover of the machine including the operating manual and spare parts list, as well as training in operating the devices with safety instructions and warning information from your dealer.

I confirm additionally that I have read and understood the operating manual and am in agreement with the information contained therein. This applies in particular to the chapter Safety.

Client

Name		First name	
Address			
Post code		Town/city	
Telephone		Fax	
E-mail		Date	

Machine

Machine	MU-	Serial number	
Working width		Gear-box	
Rigid mount-ing		Non-rigid mounting	
Year of con-struction		Delivery date	
Delivered by			

Signature of client

Signature and stamp of sales partner

Handover declaration – Copy

Table of Contents

Handover declaration **3**

Handover declaration – Copy **5**

About this operating manual **8**
- Target group 8
- Safety 8
- Instruction 8
- Other applicable documents 8
- Symbols 9

Safety **10**
- For your safety 10
- Warning signs 10
- Definitions 14
- Who is allowed to operate the machine? 14
- Coupling 15
- Centre of gravity 16
- Road transport 18
- Putting the machine into operation 18
- Uncoupling the machine 19
- Care and maintenance 20
- Further regulations 21

Familiarising yourself with the machine . **22**
- Range of application of the machine 22
- Features of the machine 23
- Designation of components 24
- Technical specifications 27

Delivery and assembly **29**
- Checking the scope of delivery 29

Adapter **30**
- Three-point-linkage 30
- Two-point-linkage 31
- Farm loader Linkage 35

Coupling the machine **39**
- Implement triangles 39
- Three point linkage 40
- Two-point-linkage 40
- Yard loader 41
- Mechanical drive 42
- Hydraulic drive 43

Preparation **44**
- Working width 44

Driving on the road **45**
- Transport position 45
- Transport without coupling 45

Mulching **46**
- Settings 46
- Task 50

Cleaning and care **51**
- Cleaning 51
- Care 51

Parking and storage **52**
- Setting down the machine in a secure position 52
- Two-point-linkage 54
- Storing the machine 54

Maintenance **55**
- For your safety 55
- General information 56
- Maintenance intervals and setting work 59
- Lubricating work 60
- PTO shaft 62
- Transmission oil 63
- Tools 64
- V-belt 66
- Runners 69

Accessory **70**
- Wear insert 70
- short-chopping bar 70
- Cutting bar 70
- Pressure relief valve 71
- Support wheels 71
- Operating hours counter 71

Fault elimination **72**

Disposal of the machine **75**

EU-conformity declaration **76**
- EC Directive 2006/42/EG 76

UK Declaration of Conformity **77**
- UKCA 77

Index **78**

Target group

This operating manual is intended for trained machine operators and persons who are otherwise qualified to carry out landscape work and who have received training in how to use this machine.

Safety

Familiarise yourself with the contents of this operating manual which are relevant for your activity before commissioning or assembling the machine. Always read through the safety instructions in the chapter “Safety” and observe the warning information in the individual chapters. In this way, you will achieve optimum work results and operational safety.

For the employer

Staff must be instructed in the safe handling of the machine before the initial commissioning. Untrained or unauthorised persons are not permitted to use the machine.

The following are included in this training:

- Checking that staff possess the necessary requirements for safely handling the machine.
- Handing out the operating manual and the other relevant and applicable documents or an intensive course of training which, in particular, includes the safe handling of the machine.

Regular instruction sessions

Instruct your staff regularly, but at least once a year, concerning the basic procedural measures for safely handling the machine.

Instruction

You will receive training from your dealership concerning using the controls, safe operation and care of the machine. Commissioning without first receiving training is not permitted.

Other applicable documents

In addition to the operating manual, other documents also form an integral part of the machine:

EU-conformity declaration	Integral part of this operating manual → Chapter »EU-conformity declaration«, Page 76
Spare parts list	Integral part of the delivery with this machine
PTO shaft operating manual	Integral part of the delivery with this machine

Symbols

In order to make this manual clear and easy to read, we have used various symbols. They are explained below:

- A bullet point accompanies each item in a list

▸ A triangle indicates operating functions which must be performed

→ An arrow indicates a cross-reference to other sections of this manual

[+] A plus sign indicates an accessory that is not included in the standard version.

Pictograms

We have also used pictograms to help you find instructions more quickly:



The warning triangle indicates warning information. Failure to observe these safety instructions can result in:

- Moderate to serious injury
- Fatal injury

You will find the warning information associated with individual operations, where it is important to observe the warning information before these operations are carried out.
You will also find safety instructions in the chapter »Safety« which cannot be assigned to any particular operations, but increase your ability to work safely in different situations.



This sign indicates important instructions regarding the machine. Failure to observe these safety instructions can result in:

- Serious faults in the correct operation of the machine.
- Damage to the machine



This symbol indicates information, tips and instructions about operation.



This symbol indicates tips for assembly or adjustment work.



This symbol indicates examples that help you to understand the instructions better.

Parts in the text which refer to individual machines or to conditions have a colored background. After the colored section, the text then applies again to all machines. For example:

Only for MU-Farmer/S with pneumatic brake system

▸ Connect brake hoses

▸ Connect hydraulic hoses

For your safety

This chapter contains general safety instructions. Each chapter of the operating manual contains additional warning instructions which are not described here. Observe the safety instructions:

- In the interest of your own safety,
- In the interest of the safety of others
- To ensure the safety of the machine

Numerous risks can result from handling landscaping machines the wrong way. Therefore, always work with particular care and never under time pressure. Therefore, always work with particular care and never under time pressure.

For the employer
Inform personnel working with the machine of these safety instructions at regular intervals and according to statutory regulations.

Warning signs

On the machine you will find labels that serve to ensure your safety. The labels must not be removed. If labels become illegible or begin to peel off, new labels can be ordered and attached in the appropriate places.

Front attachment or rear attachment

Three-point-linkage

Mechanical drive

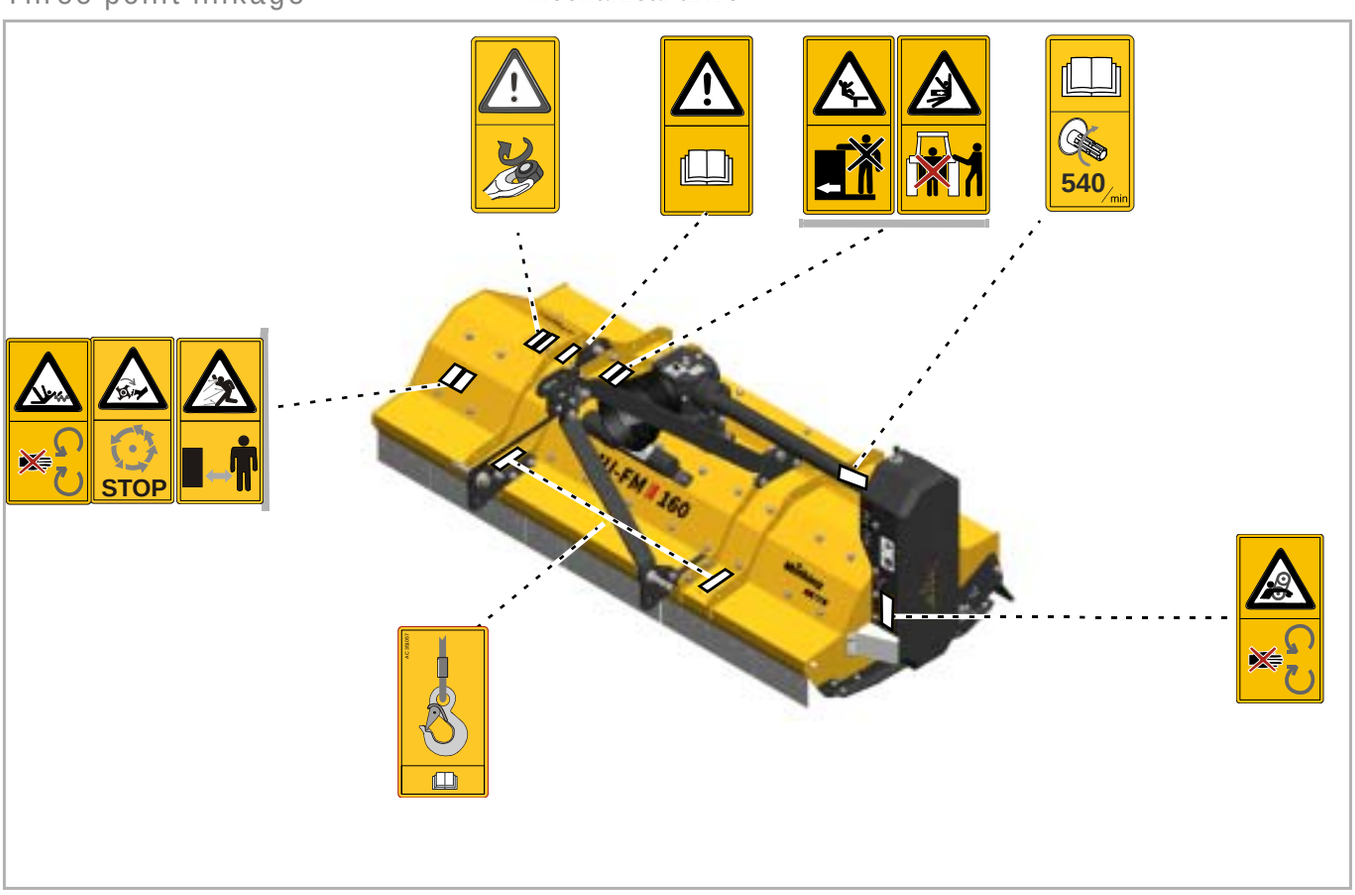

MU-FM Vario

Front attachment

Two-point-linkage

Mechanical drive

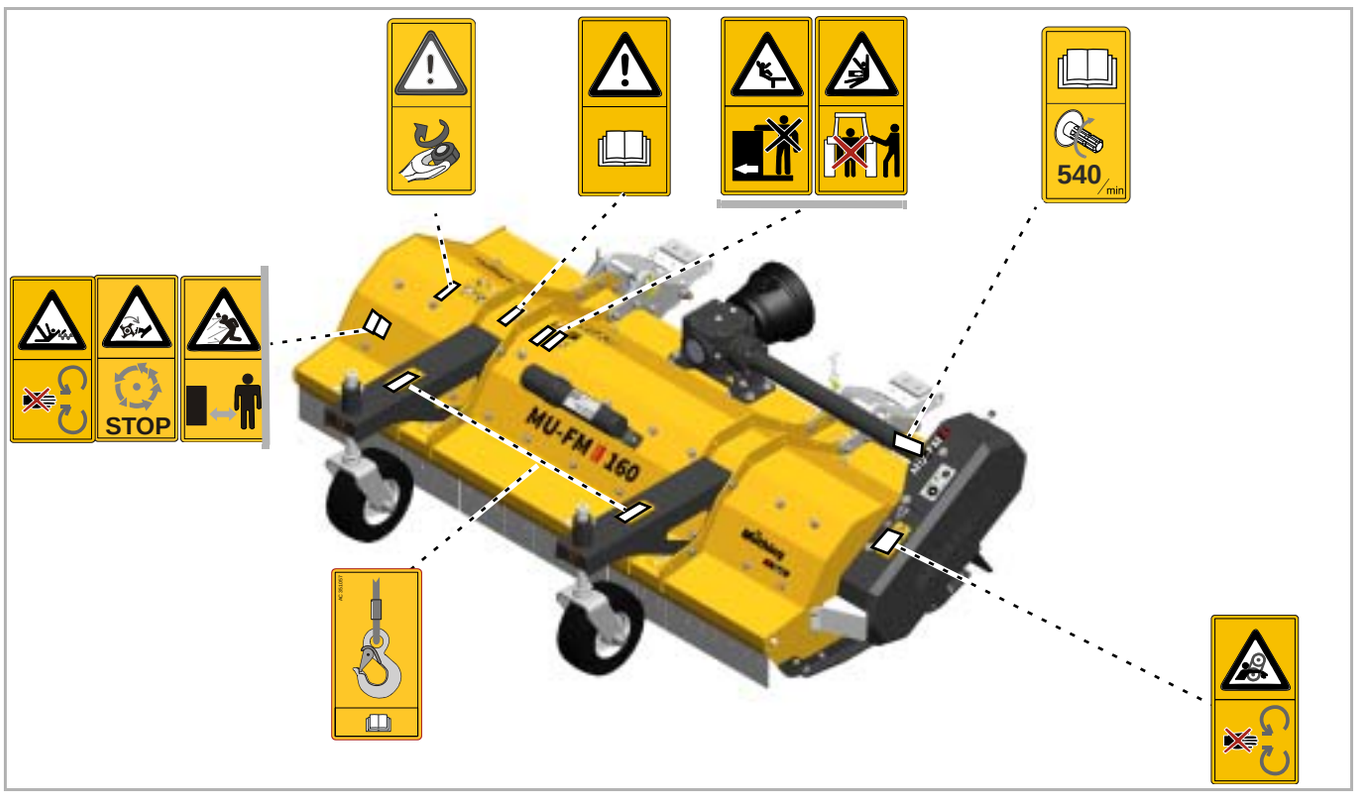

Adapter farm loader

Hydraulic drive



Meaning of warning signs



Read the operating manual carefully and follow the instructions
Commissioning of the machine must not take place before the operating manual has been read and understood. This particularly applies to safety instructions.



Do not stand between the carrier vehicle and the machine
Standing between the carrier vehicle and the machine while the engine is running is prohibited, especially during coupling and uncoupling. The carrier vehicle must also be secured so that it cannot roll away.



Riding on the machine is prohibited
It can result in serious or even fatal injury.



Do not remove the protective equipment
Do not open or remove the protective devices while the engine of the carrier vehicle is running. Never operate the machine without the protective device.



Be aware of the danger of being pulled in
There is a danger of being pulled into the PTO shaft in the event of inappropriate use.



Proceed with great care in the event of leaking hydraulic fluid
Do not look for leakage points without correct protection. Fine oil jets could penetrate eyes and skin under high pressure. Observe the corresponding safety instructions in the operating manual.



Shackles
Only raise the machine using loading equipment at the points indicated.



Rotating and trailing machine parts
Only approach the machine when all machine parts have stopped moving.



Danger of objects being thrown out
During operation, there is a danger of objects such as stones being picked up and thrown out by the machine. Ensure that no persons are present in the hazard area.



Observe the maximum operating pressure
The machine's hydraulic system is designed for the specified operating pressure. A higher operating pressure can lead to hydraulic oil leakage. Persons can be injured by hydraulic oil escaping under pressure.

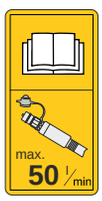

Observe the maximum power of the hydraulic system
The machine's hydraulic system is designed for the specified delivery rates. A higher delivery rate can lead to hydraulic oil leakage. Persons can be injured by hydraulic oil escaping under pressure.

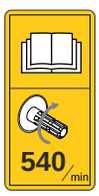

Check the rotational speed of the PTO stub shaft
Connect PTO shaft to a PTO stub shaft with an appropriate rpm. Always switch off the PTO stub shaft when working on the machine.



Retighten screws
After the first hours of operation, and as required, all screws must be checked and tightened if necessary. Vibrations might have loosened the screwed connections.

Definitions

All direction information is given in relation to the direction of travel of the machine:

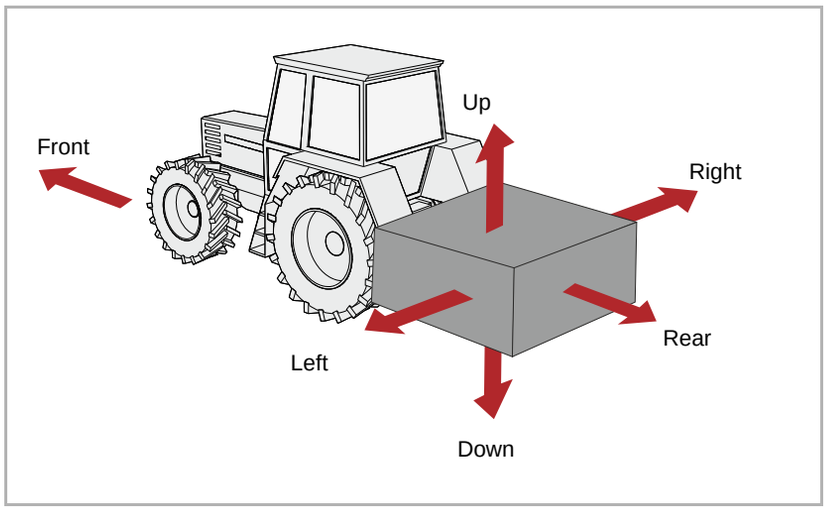

Who is allowed to operate the machine?

Only qualified personnel
Only qualified persons who have been informed of the dangers associated with handling the machine are permitted to operate, service or repair the machine. As a rule, such persons are trained machine operators or have had similar intensive training.

Coupling

Increased risk of injury
There is an increased risk of injury when the machine is being coupled to the carrier vehicle. Therefore:

- The carrier vehicle must be fitted with the corresponding adaptor in order to be coupled to the machine.
- Secure the carrier vehicle so that it cannot roll away.
- Never stand between the carrier vehicle and the machine during coupling.
- Actuate the power lever slowly and carefully.

Failure to observe these instructions can result in serious or fatal injury.

Connect electric wires or cables only after mounting the attachment
The electrical supply to the carrier vehicle must not be connected up during the fitting of the lighting equipment. Short circuits and damage to the electronics are possible.

Only connect hydraulics at zero pressure
Only connect the hydraulic hoses to the carrier vehicle while the hydraulic system on the carrier vehicle and machine is de-pressurised. A hydraulic system under pressure can trigger unpredictable machine movements.

High pressures in the hydraulic system
The hydraulic system is under high pressure. Regularly check all lines, tubes and screwed connections for leaks and externally visible damage. Only use suitable tools when looking for leaks. Rectify any damage immediately. Oil escaping under pressure may result in injuries and fires. In the event of injuries, seek medical attention immediately.

Color-coded hydraulic hoses
To avoid operating errors, the sockets and plugs of the hydraulic connections between the carrier vehicle and the machine should be color-coded. Wrongly connected hydraulic hoses can trigger unpredictable movements of the machine.

Centre of gravity

Observe the total weight, axle loads, tyre load-bearing capacity and minimum ballast specifications
The front or rear mounting of machines must not cause the carrier vehicle's permissible total weight, permissible axle loads, or tyre load-bearing capacity to be exceeded. The front axle or steering axle must bear at least 20 % of the empty weight of the carrier vehicle to ensure steering capability.

You can calculate:

- Total weight
- Axle loads
- Minimum added weight

Data

For this calculation, some data is required out of the following documents and measurement results:

- Operating manual of carrier vehicle
- This operating manual
- Measurement results from carrier vehicle and attached machine

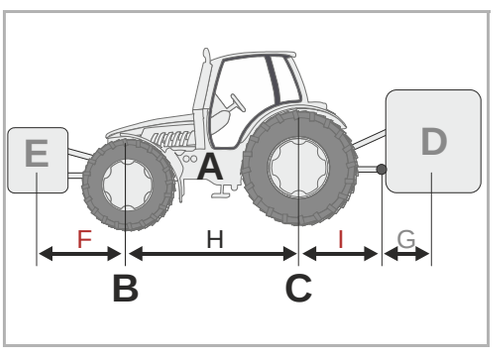

Data from the operating manual of the carrier vehicle:

- (A) unladen weight
- (B) front axle load
- (C) rear axle load
- (H) wheel base of carrier vehicle

Please take into consideration, for example, the weight of water in the tyres, accessories, etc.

Data from this operating manual:

- (D) Total weight of the machine when rear-mounted; the supporting load with the machines attached
- (E) Total weight of the machine when front-mounted
- (G) Distance between the lower link ball midpoint and the machine's centre of gravity when rear-mounted. With machines attached, G=0.

Data which you can determine by measuring:

- (F) Distance between the machine's centre of gravity when front-mounted and the front-axle midpoint
- (I) distance between the rear axle midpoint and the lower link ball midpoint. For rear-mounted machines between rear axle midpoint to drawbar coupling midpoint or hitch ball

Calculation

The measured values can now be inserted into the formulas.

Ballast with front weights

Calculating the **ballast with front weights** on rear-mounted machines.

$$\text{Front ballast in kg} = \frac{D \times (I + G) - (B \times H) + (0,2 \times A \times H)}{F + H}$$

Ballast with rear weights

Calculating the **ballast with rear weights** on front-mounted machines.

$$\text{Rear ballast in kg} = \frac{(E \times F) - (C \times H) + (0,45 \times A \times H)}{H + I + G}$$

Front axle load

Calculating the **actual front axle load**

$$\text{Front axle load in kg} = \frac{E \times (F + H) + (B \times H) - D \times (I + G)}{H}$$

Total weight

Calculating the **actual total weight**

$$\text{Total weight} = E + A + D$$

Rear axle load

Calculating the **actual rear axle load**

Rear axle load in kg = actual total weight - actual front axle load

Tyre load-bearing capacity

Data on the tyre load-bearing capacity of the front and rear tyres can be found in the tyre manufacturer's documentation.

- The front tyre load-bearing capacity for two wheels is equal to twice the permissible tyre load-bearing capacity of a single front wheel.
- The rear tyre load-bearing capacity for two wheels is equal to twice the permissible tyre load-bearing capacity of a single rear wheel.

Summary

Check if the following conditions are met:

- The actual rear axle load is less than the permissible values for the axle load stated in the operating manual of the carrierer vehicle
- The actual total weight is less than the permissible values for the total weight stated in the operating manual of the carrierer vehicle
- The sum of the permissible rear wheel load capacity is higher than the real rear wheel load capacity
- The sum of the permissible front wheel load capacity is higher than the real front wheel load capacity

If all conditions are met, the machine may be attached to this carrier vehicle.



You can use a sufficiently large weigh-bridge to determine the total weight, the rear axle load and the front axle load by weighing.

Road transport

Make sure that the condition of the machine conforms to road traffic regulations
The machine must conform to current traffic regulations if you intend to drive it on public roads. This includes for example:

- Lighting, warning and protective equipment must be fitted
- The permissible transport width and weight, axle load, tyre load-bearing capacity and total weight are observed

The driver and owner of the vehicle are liable if traffic regulations are not observed.

Closing ball valves
If ball valves are provided on the hydraulic lines or the chassis cylinders, the ball valves must be closed for road transport. The accidental actuation of control devices on the carrier vehicle could otherwise cause movements on the machine. Accidents or damage to the machine may be caused as a result.

Check release cable for the quick-release coupling
Release cables must hang loose and must not, when in their lowered position, release the couplings of their own accord. Attached machines might otherwise come loose from the three-point linkage of their own accord.

Riding on the machine is strictly prohibited
People or objects must never be transported on the machine. Riding on the machine poses a risk to life and limb and is strictly prohibited.

Take altered driving and braking behaviour into account
Driving and braking performance is altered when the machine is attached to the tractor. Take the width and balancing weight of the machine into consideration, especially when cornering. A driving style which not adjusted to the road conditions can lead to accidents.

Drive at a suitable speed
Always adjust your driving speed to the road conditions. Driving at excessive speeds in poor road conditions can create extremely high forces which can severely load or overload the carrier vehicle and machine. Driving at unsuitable speeds can cause machine damage and lead to accidents.

Putting the machine into operation

Training required before commissioning
The machine must not be put into operation until the user has been given proper training by an employee of the dealer, a factory representative, or an employee of the manufacturer. Commissioning without training can lead to damage to the machine due to false operation or accidents can happen.

Ensure that the machine is in perfect working condition
Do not operate the machine unless it is in perfect working condition. Check all important components and replace any defective components before starting the machine. Defective components can cause damage to equipment and personal injury.

Do not remove the protective equipment
The protective equipment must not be removed or by-passed. Check all protective equipment before starting the machine. Unprotected machine parts can cause serious or fatal injury.

Riding on the machine is strictly prohibited
People or objects must never be transported on the machine. Riding on the machine poses a risk to life and limb and is strictly prohibited.

Check the hazard area
Before driving off, folding out, and operating the machine and during operation, check its hazard area. Make sure that you have an adequate view. Do not begin work until the hazard area is cleared of any persons or objects. Information regarding the hazard area can be found in the corresponding chapter.
→ Chapter »Mulching«, Section »Settings«, Page 46.
Parts could be ejected from the machine at high speed in certain circumstances. The hazard area, particularly in front of and behind the machine, must be cleared of any persons, animals or objects before starting.
Any use of the machine without verification of the hazard area can lead to serious or fatal accidents.

Retighten all nuts, bolts and screws
Nuts, bolts and screws should be checked at regular intervals and tightened if necessary. Screws can come loose unnoticed while operating. Damage to the machine or accidents may be caused as a result.

What to do in the event of a fault
In the event of a malfunction, shut down and secure the machine immediately. The fault may be eliminated immediately, or a specialist workshop must be assigned the task. Further operation of the machine can lead to damage to the machine or injury to persons.

Uncoupling the machine

Increased risk of injury
There is an increased risk of injury when uncoupling the machine from the carrier vehicle. Therefore:

- Secure the carrier vehicle so that it cannot roll away.
- Never stand between the carrier vehicle and the machine during uncoupling.
- Actuate the power lever slowly and carefully.
- Make sure the machine is standing on a secure and level surface
- Do not disconnect the hydraulic hoses until the hydraulic system of the carrier vehicle and machine is de-pressurised.

Failure to observe these instructions can result in serious or fatal injury.

Care and maintenance

Observe the care and maintenance intervals
Observe prescribed intervals for maintenance checks and inspections specified in the operating manual. If these periods are not observed, this can lead to damage to the machine, poor quality of work or accidents.

Use replacement parts with identical properties
Many components have special properties that are essential for the stability and correct operation of the machine.
When replacing components, dimensions, stability and material quality must be guaranteed. We recommend the exclusive use of original replacement parts.
Use of replacement parts which do not correspond to requirements could cause damage to the machine or impaired performance.

When performing any care and maintenance work:

- Switch off the PTO stub shaft
- Depressurise the hydraulic system
- If possible, uncouple the carrier vehicle.
- Make sure the machine is standing securely. Provide additional support as required
- Do not use parts of the machine as climbing aids; use only secure steps, ladders or other means of access
- Secure the machine against rolling away
- Never reach into the V-belt while it is moving

It is only possible to guarantee work safety during care or maintenance work through observing these regulations.

Turn off the electrical supply
Prior to carrying out work on the electrical system, disconnect the system from the power supply. Systems supplied with electrical power can cause damage to equipment and personal injury.
Replace hydraulic hoses
Replace hydraulic hoses every six years. Hydraulic hoses can age without any externally visible damage. Defect hydraulic lines can lead to severe or fatal injuries.

Caution when cleaning with a high-pressure cleaner
The machine can be cleaned using either water or a steam jet. Only use a low pressure to clean bearings, fans, signal mixer units, plastic parts and hydraulic hoses. Excessively high pressures can cause damage to these parts.

Before carrying out welding work, disconnect the battery and alternator
Before carrying out any electric welding work on the attached machine, disconnect the battery of the carrier vehicle and disconnect the alternator. This avoids damage to the electrical system.

Tighten all screwed connections
All screwed connections that are released during maintenance and repair work must now be retightened. Loose screwed connections can cause bolts to undo without you noticing during your work. As a result, machine parts can become detached. Severe injury to persons or damage to equipment can result.

Further regulations

Observe the regulations
In addition to these safety instructions, observe the following:

- Accident prevention regulations
- Generally recognised safety regulations, occupational health requirements and road traffic regulations
- Information and instructions in this operating manual
- Regulations relating to operation, maintenance and repair

Familiarising yourself with the machine

This chapter contains general information on your machine as well as information on:

- Range of application
- Features
- Designation of components
- Technical specifications

Range of application of the machine

The machine is only allowed to be used for its intended purpose in landscaping or similar fields of work in accordance with its tooling.

Tool	Purpose
Carbide M shackle flails	To cut grass, other growth or for cutting up to a maximum of 2 cm diameter. The shackle flails can deviate sideways. As they are made from carbide, the flails can be used for longer and need to be replaced less often.

Since the conditions of use are very varied, the user must pay particular attention to the machine's performance limits. The machine must be switched off immediately if there is any indication of overstress.

Proper use

The machine should only be used for the designated work as described in this operating manual. Any application other than or beyond this is considered improper use.
Examples of improper use:

- Transporting persons or objects
- Cutting of any products other than those specified or those of a similar nature

→ »Range of application of the machine«

- Transferring power to other objects
- Front attachment of machines designed for rear attachment
- Rear attachment of machines designed for front attachment
- Working widths under 7 mm clearance from ground
- Any type of ground work
- Use of the machine in a position in which the tools do not point towards the ground, for example in a vertical position

The manufacturer and dealers are not liable for damage caused by improper use. The risk is borne solely by the user.

Features of the machine

Robust housing in optimised form
The housing is particularly robust for heavy use and is designed in an optimised form.

Tools
The tools are manufactured using high-quality material. Optimal shredding is achieved in conjunction with the short chopping bars.

Power transmission
In the case of mechanically driven machines, power is transmitted to a gear box using a PTO shaft. From there, the rotor is driven via V-belt. From there, the rotor is driven via V-belt.

In hydraulically driven machines, power is transmitted directly to a pulley via a hydraulic motor. From there, the rotor is driven via V-belt.

Safety
The machine is constructed in accordance with EU regulations, for maximum possible safety of operation. The machine bears the CE mark and the UKCA mark.

Designation of components

Housing

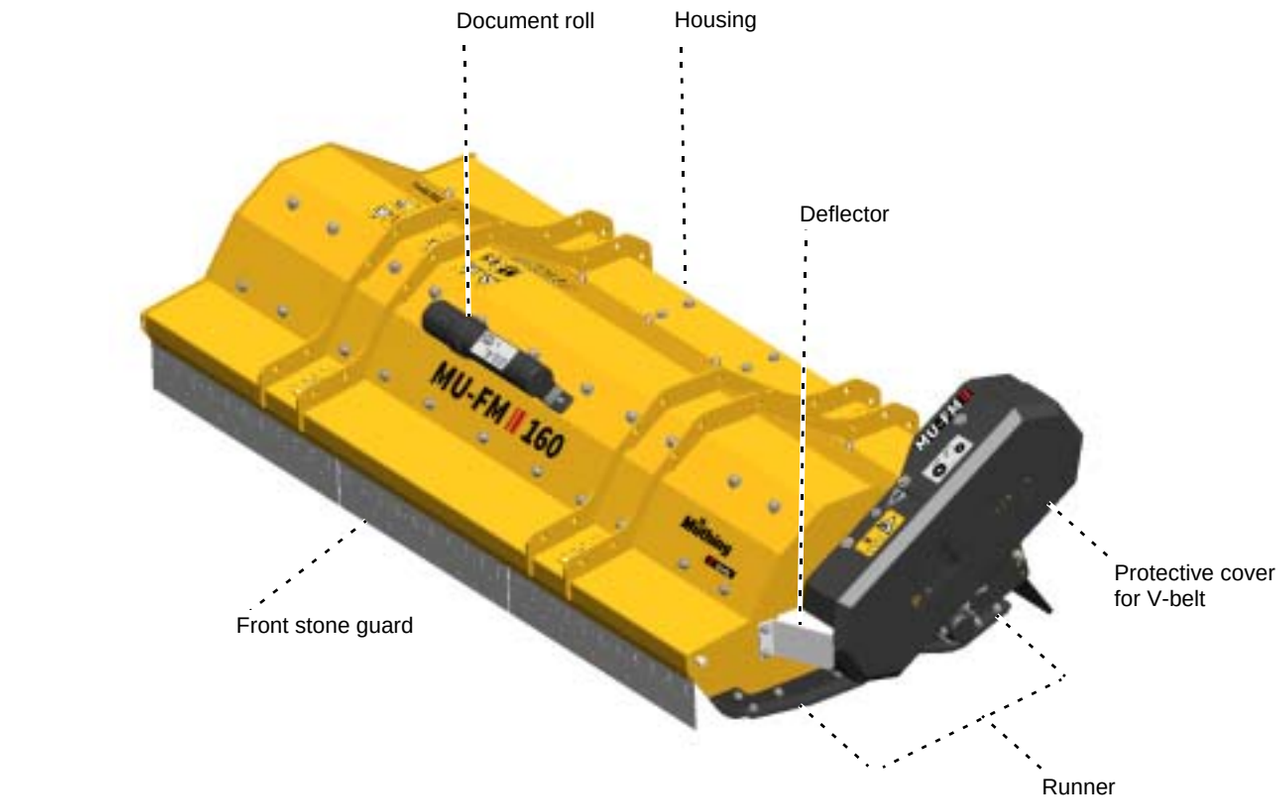

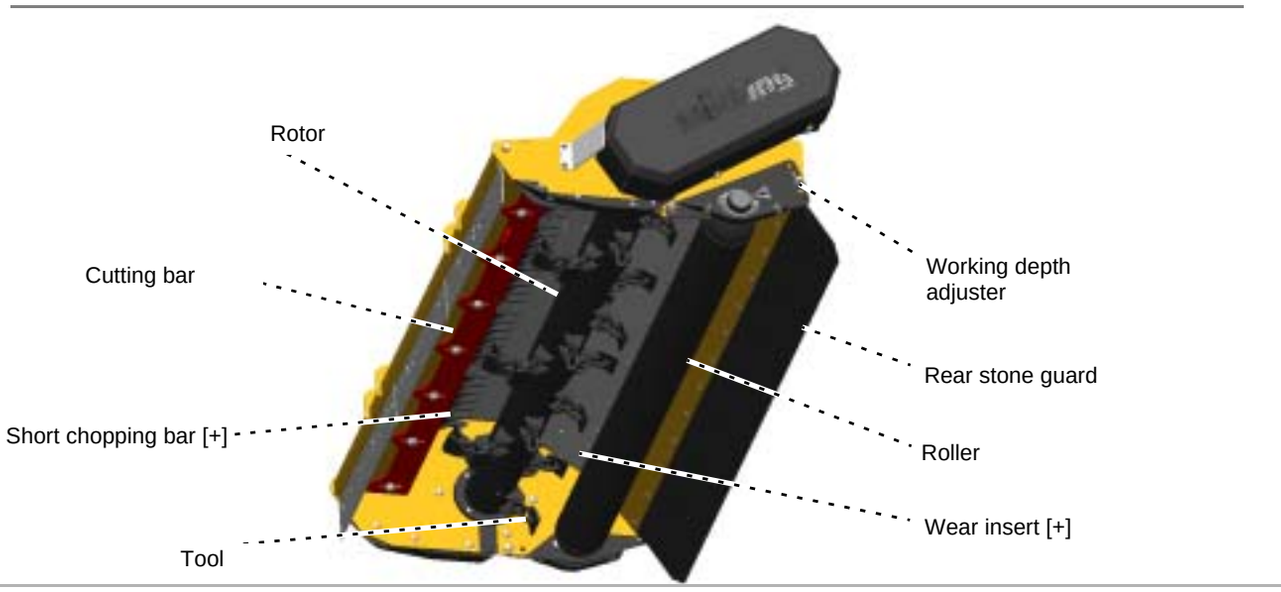

Three-point-linkage

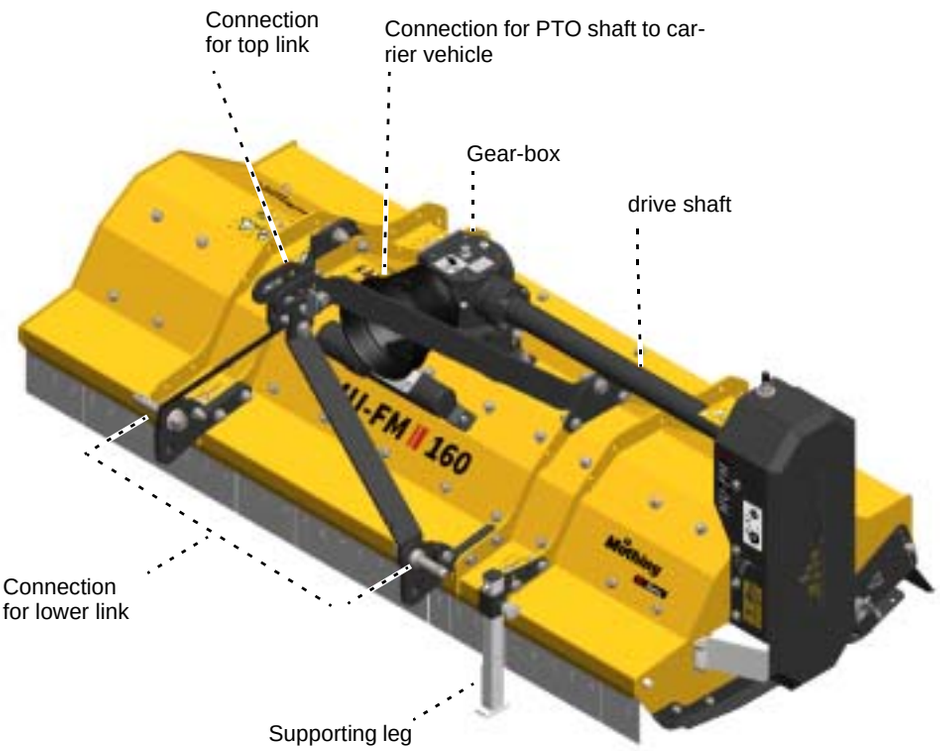

Two-point-linkage

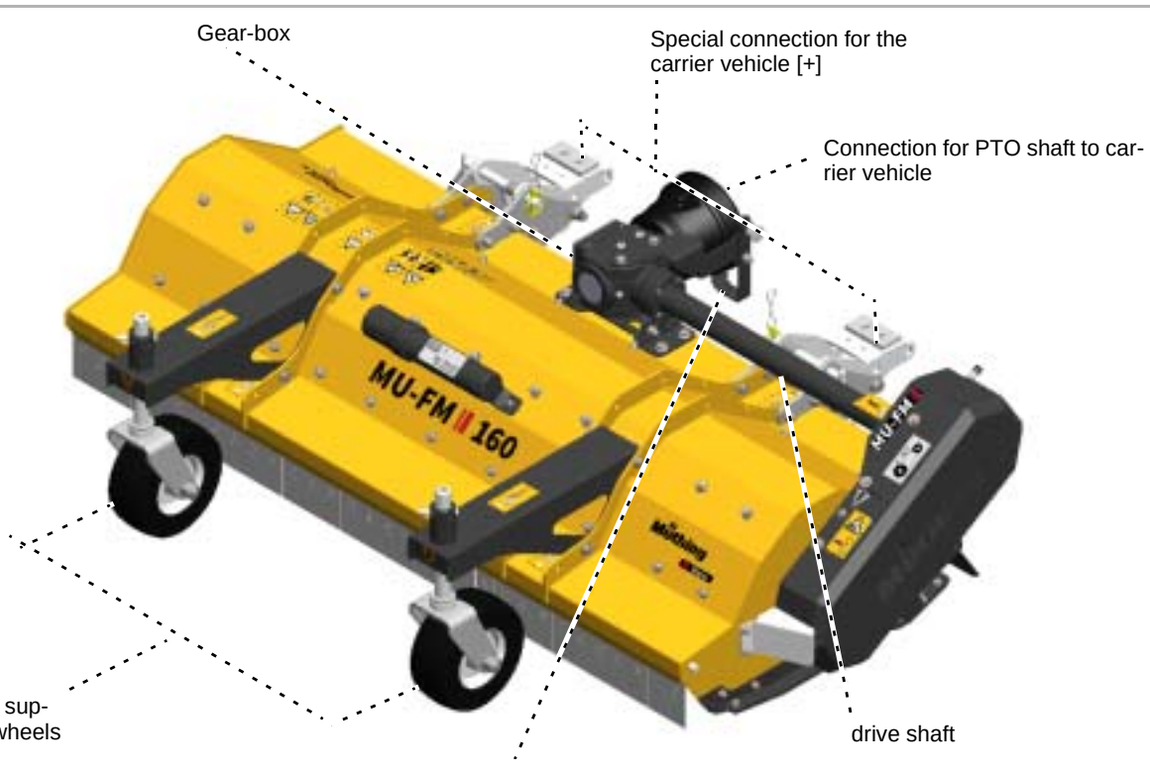

Adapter farm loader

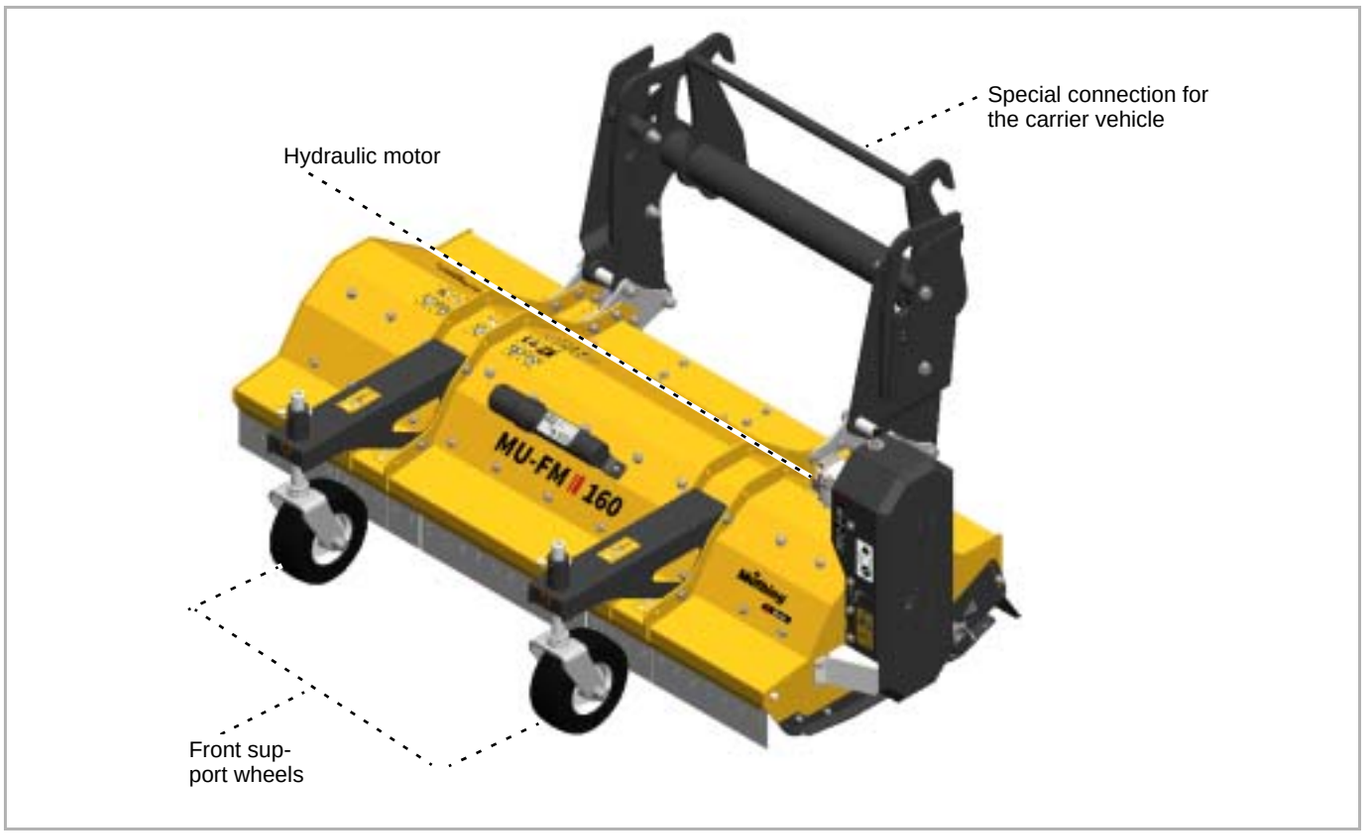

Technical specifications

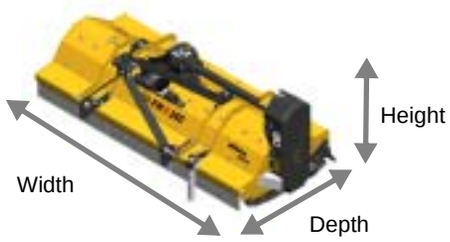

	MU-FM Vario 120	MU-FM Vario 140	MU-FM Vario 160
Height [m]			
With two-point attachment	0.52	0.52	0.52
With Tree-point attachment	0.80	0.80	0.80
With adapter farm loader	1.00	1.00	1.00
Width [m]			
With basic equipment	1.45	1,65	1.85
Depth [m]			
With two-point attachment	1.30	1.30	1.30
With Tree-point attachment	0.95	0.95	0.95
With adapter farm loader	1,70	1,70	1,70
Working width [m]			
In work position	1.20	1.40	1.60
Total weight basic equipment [kg] / Permitted total weight [kg]			
With two-point attachment	220 / 295	240 / 315	260 / 335
With Tree-point attachment	210 / 290	230 / 310	250 / 330
With adapter farm loader	260 / 400	280 / 420	300 / 440
Centre of gravity (dimension G)			
With two-point attachment	0,35	0,35	0,35
With three-point-linkage, rear	0.45	0.45	0.45
With three-point-linkage, front	0.40	0.40	0.40
With adapter farm loader	0.55	0.55	0.55
Rotational speed of rotor [rpm]			
Minimum	2700	2700	2700
Maximum permitted	3000	3000	3000
Power requirement [kW]			
Minimum	15	17	19
Maximum permitted	35	35	35

	MU-FM Vario 120	MU-FM Vario 140	MU-FM Vario 160
Working depth [mm]			
With support roller, in 11 mm steps	7-50	7-50	7-50
With front support wheels und support roller, in 11 mm steps	7-50	7-50	7-50
With front support wheels and rear support wheels, in 5 mm steps	7-90	7-90	7-90
Category			
Individual adapter for each carrier vehicle			
Number of tools			
Carbide M shackle flails	20	24	28
Lubricants			
Transmission oil	API GL-4/5, SAE 75W-90, MIL-L-2105E		
hydraulic oil	HLP46		
Noise emission [dB(A)]			
In the workplace	< 85	< 85	< 85
Paint colors			
Yellow	RAL 1007	RAL 1007	RAL 1007
Black	RAL 9005	RAL 9005	RAL 9005
PTO shaft			
Model	Depending on the carrier vehicle		
Hydraulic drive			
Oil quantity l / min depending on the model of hydraulic drive	35-70		
Maximum permissible operating pressure for the hydraulic motor [bar] [bar] depending on the model of hydraulic drive	180-350		
Connections required on carrier vehicle	1 x feed 1 x pressureless return line		
Depending on the hydraulic motor type	1 x leak-off oil line, depressurised		

Checking the scope of delivery

The machine is delivered completely assembled. If parts of the machine have not been assembled, please contact your dealer.

Do not assemble the machine yourself
Do not perform assembly work yourself since requirements for an orderly condition of the machine are :

- Observance of a sequence of worksteps
- Compliance with tolerances and torques

Incorrect assembly may result in damage to the machine or poor performance.

If parts are missing or have been damaged during transportation, please submit a claim immediately to your dealer, importer or the manufacturer.

The machine must be fitted with a suitable adaptor in order to be attached to a carrier vehicle. Before attaching the machine, you should therefore check whether the correct adaptor for your carrier vehicle is present on the machine. Only use carrier vehicles from the list below.

If you do not have the correct adaptor:

- Contact your dealer or the manufacturer. They will be able to supply the correct adaptor.

Three-point-linkage

Three-point trestle Kat 1

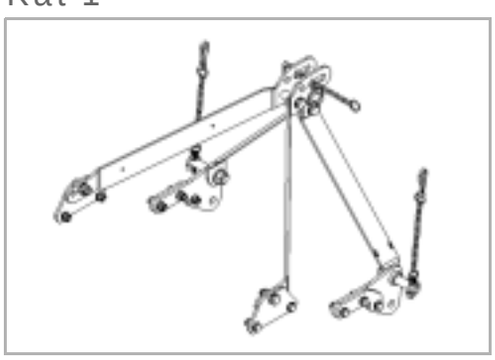

Standard implement triangle for attaching front-mounted or rear-mounted implements to carrier vehicles in the following category:

- 1

Weight: 18,5 kg

Cat. 0 implement triangle

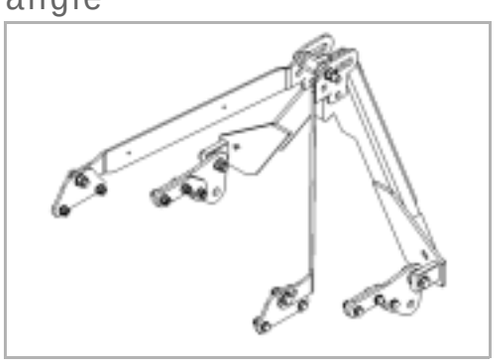

Standard implement triangle for attaching front-mounted implements to carrier vehicles in the following category:

- 0

Weight: 24,0 kg

Two-point-linkage

Universal attachment kit

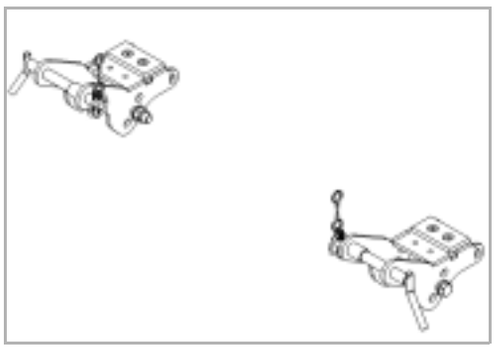

Please contact your dealer to find out whether use of the universal attachment kit is permitted for your vehicle.

Weight: 7,5 kg

Cat. 0 implement triangle

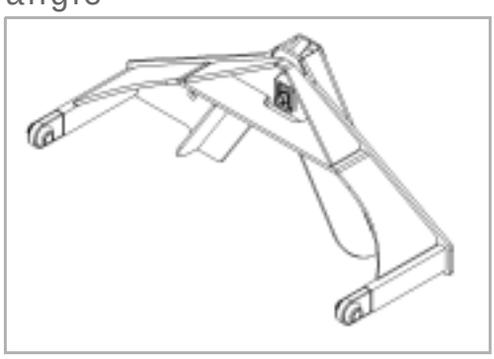

Standard implement triangle for attaching front-mounted implements to carrier vehicles in the following category:

- 0

Can only be used in combination with the universal attachment kit

Weight: 22,0 kg

Coupling triangle Kat 1N

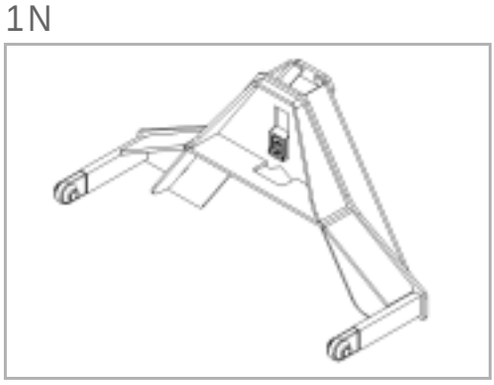

Standard implement triangle for attaching front-mounted implements to carrier vehicles in the following category:

- 1N

Can only be used in combination with the universal attachment kit

Weight: 25,0 kg

Adapter

Implement triangle Hako

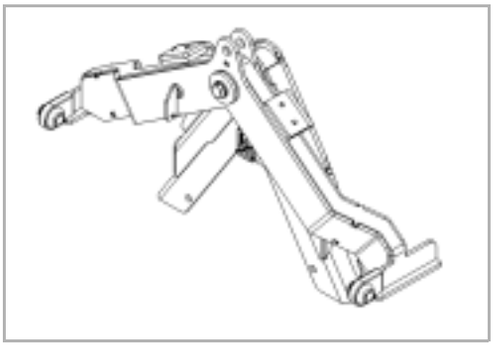

Swivelling implement triangle for attachment of front-mounted implements to carrier vehicles:

- Hako CM-1600
- Hako CM-1650

Can only be used in combination with the universal attachment kit

Swivelling implement triangles enable additional ground adaptation of the machine.

Weight: 33,5 kg

Coupling triangle Toro

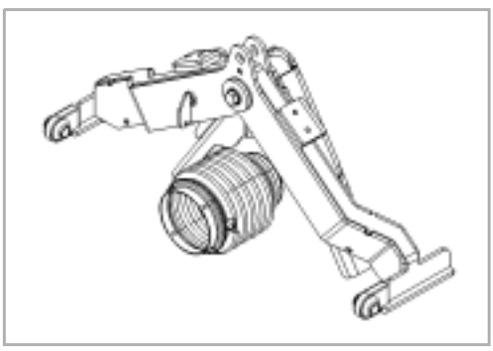

The coupling triangle can only be used for machines with mechanical drive.
Swivelling implement triangle for attachment of front-mounted implements to carrier vehicles:

- Toro-GM-360

Can only be used in combination with the universal attachment kit

Swivelling implement triangles enable additional ground adaptation of the machine.

Weight: 30,5 kg

Support arms Hako

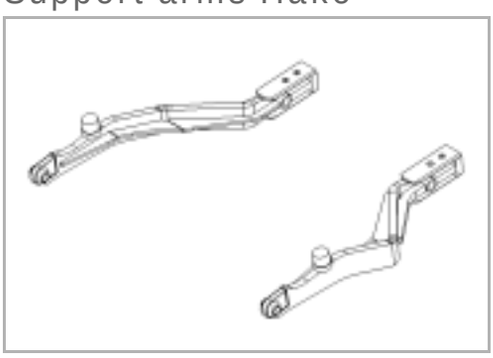

For attachment of front-mounted implement to carrier vehicles

- Hako CM-1250

Can only be used in combination with the universal attachment kit

Weight: 25,0 kg

Support arms ISEKI

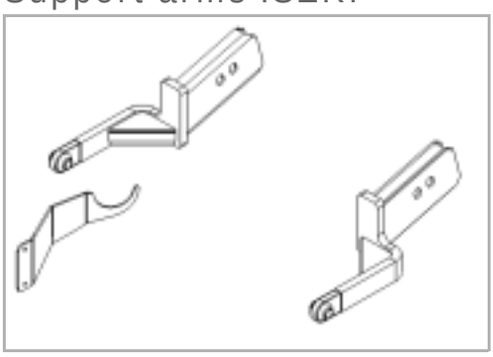

For attachment of front-mounted implement to carrier vehicles

- ISEKI SF-300
- ISEKI SF-303
- ISEKI SF-310
- ISEKI SF-330
- ISEKI SF-333
- ISEKI SF-373

Can only be used in combination with the universal attachment kit

Weight: 16,5 kg

Support arms John Deere

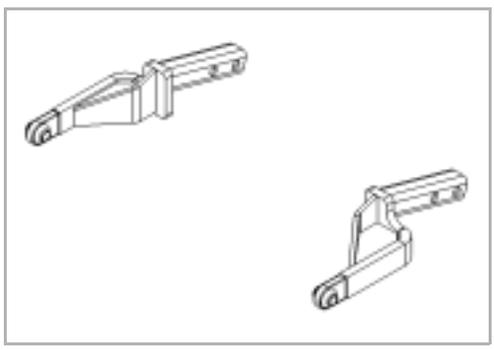

For attachment of front-mounted implement to carrier vehicles

- John Deere 1435
- John Deere 1445
- John Deere 1545
- John Deere 1565

Can only be used in combination with the universal attachment kit

Weight: 14,0 kg

Support arms John Deere 1145

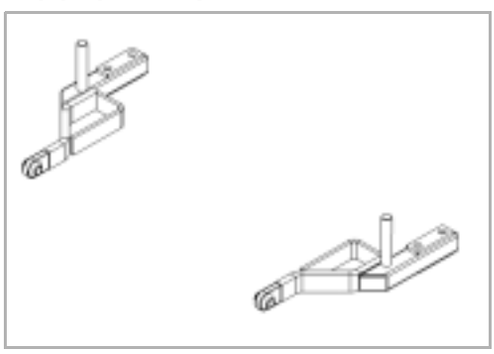

For attachment of front-mounted implement to carrier vehicles

- John Deere 1145

Can only be used in combination with the universal attachment kit

Weight: 14,0 kg

Support arms Shibaura

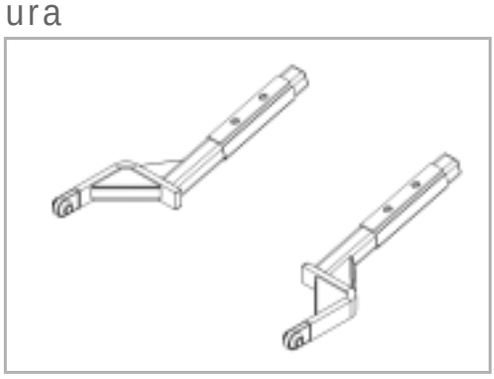

For attachment of front-mounted implement to carrier vehicles

- Shibaura CM-284
- Shibaura CM-314
- Shibaura CM-364
- Shibaura CM-374

Can only be used in combination with the universal attachment kit

Weight: 17,0 kg

Support arms Toro

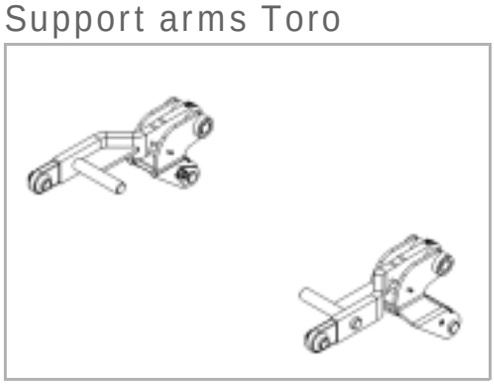

For attachment of front-mounted implement to carrier vehicles

- Toro GM-3400

Can only be used in combination with the universal attachment kit

Weight: 18,0 kg

Adapter

Support arms Grillo

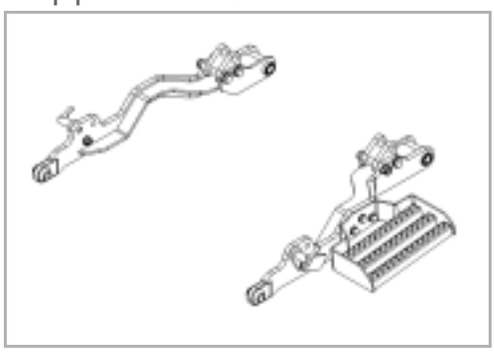

For attachment of front-mounted implement to carrier vehicles

- Grillo FD 13.09
- Grillo FD 2200
- Grillo FD 2200 TS

Can only be used in combination with the universal attachment kit

Weight: 25,5 kg

Support arms ISEKI

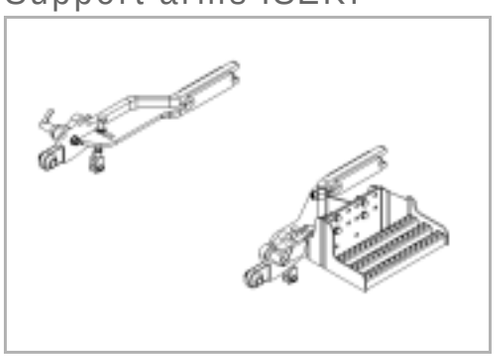

For attachment of front-mounted implements to carrier vehicles with ISEKI SF 224

- ISEKI SF 235
- ISEKI SF 438
- ISEKI SF 450
- ISEKI SF 544 (Stage V)
- ISEKI SF 551 (Stage V)

Can only be used in combination with the universal attachment kit

Weight: 27,0 kg

Attachment adapter Kubota

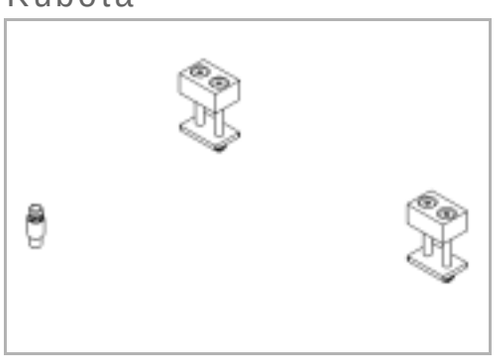

For attachment of front-mounted implement to carrier vehicles

- Kubota Serie 2006
- Kubota Serie 2880
- Kubota Serie F3680
- Kubota Serie F2560
- Kubota Serie F3060
- Kubota Serie F3560

Can only be used in combination with the universal attachment kit

Weight: 2,0 kg

Farm loader Linkage

Two variants of yard loader holders are available;

- Without hydraulic side shift
- With hydraulic side shift

Yard loader holders without hydraulic side shift:

Linkage for Multione, Avant, Cast, Norcar

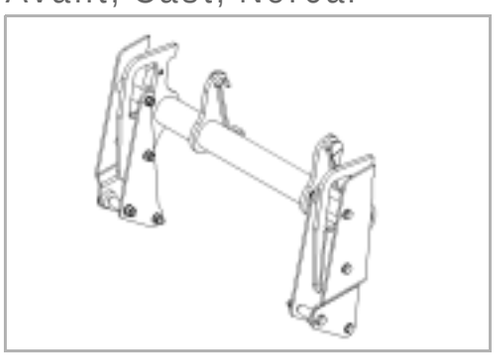

For attachment of front-mounted implement to carrier vehicles

- MULTIONE
- AVANT
- CAST
- NORCAR

Weight: 53,0 kg

Attachment for EURO-3-linkage

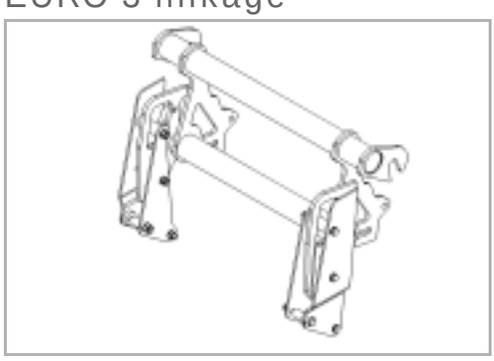

For attachment of front-mounted implement to carrier vehicles

- Euro-3-inkage

Weight: 73,0 kg

Attachment for Kramer

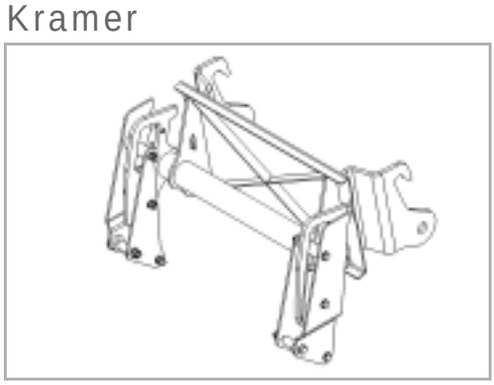

For attachment of front-mounted implement to carrier vehicles

- Kramer

Weight: 102,0 kg

Adapter

Attachment for Schäffer 336

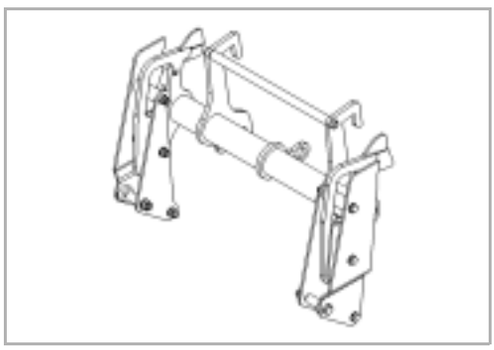

For attachment of front-mounted implement to carrier vehicles

- Schäffer 336 (Old series)

Weight: 61,0 kg

Attachment for Schäffer

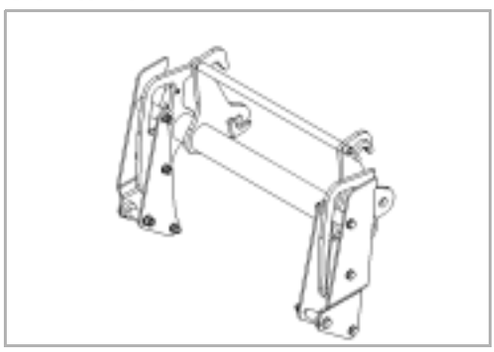

For attachment of front-mounted implement to carrier vehicles

- Schäffer with linkage SWH

Weight: 62,0 kg

Universal attachment

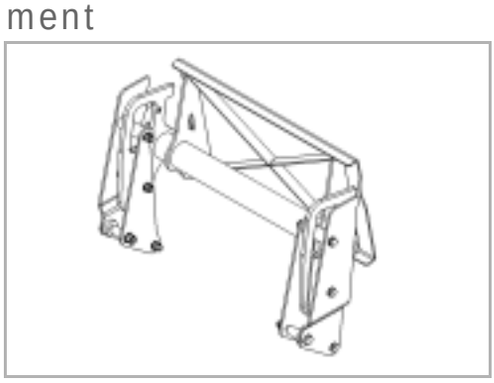

Please contact your dealer to find out whether use of the universal attachment kit is permitted for your vehicle.

Weight: 76,0 kg

Attachement Weidemann

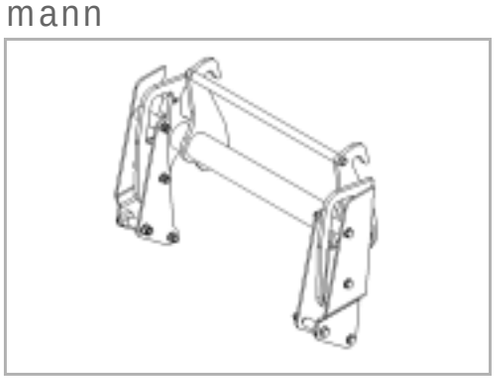

For attachment of front-mounted implement to carrier vehicles

- Weidemann with hydraulic locking device

Weight: 60,0 kg

Yard loader holders with hydraulic side shift:

Attachment adapter

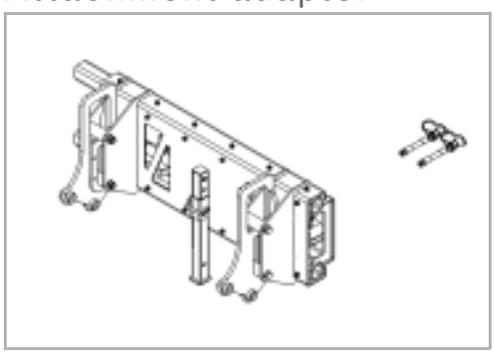

Attachment adapter for yard loader holders with hydraulic side shift. Please contact your dealer to find out whether use of the attachment adapter is permitted for your vehicle.

For attachment of front-mounted implement to carrier vehicles

- Without vehicle-specific attaching parts

Weight: 125,0 kg

Linkage for Multione, Avant, Cast, Norcar

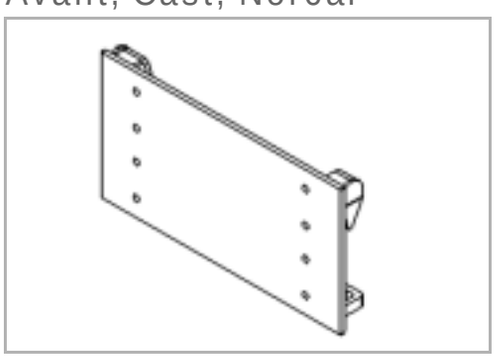

Can only be used in connection with the attachment adapter with hydraulic side shift.

For attachment of front-mounted implement to carrier vehicles

- MULTIONE
- AVANT
- CAST
- NORCAR

Weight: 15,0 kg

Attachment for EURO-3-linkage

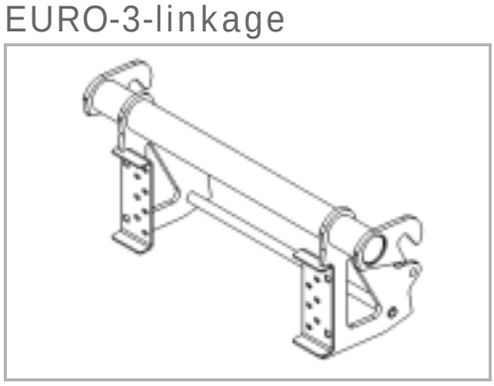

Can only be used in connection with the attachment adapter with hydraulic side shift.

For attachment of front-mounted implement to carrier vehicles

- EURO-3-Aufnahme

Weight: 35,0 kg

Attachment for Schäffer 336

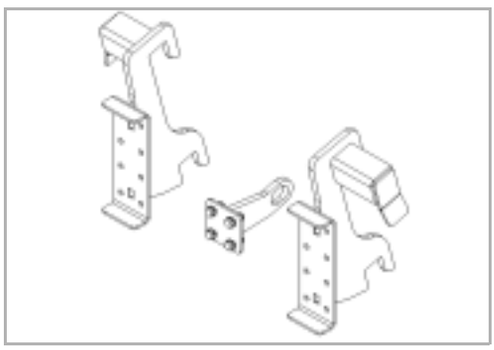

Can only be used in connection with the attachment adapter with hydraulic side shift.

For attachment of front-mounted implement to carrier vehicles

- Schäffer 336 (Old series)

Weight: 20,0 kg

Attachment for Schäffer

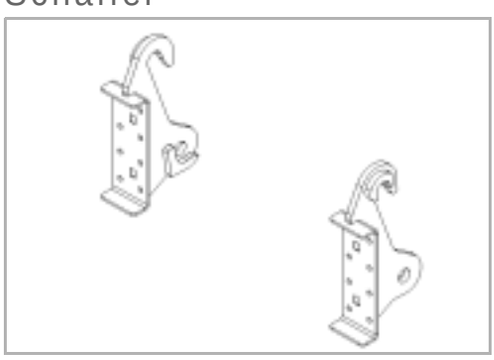

Can only be used in connection with the attachment adapter with hydraulic side shift.

For attachment of front-mounted implement to carrier vehicles

- Schäffer with linkage SWH

Weight: 15,0 kg

Attachment for Weidemann

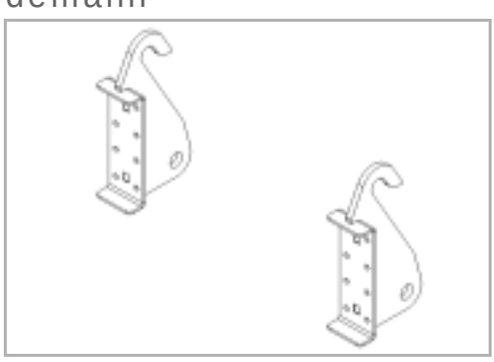

Can only be used in connection with the attachment adapter with hydraulic side shift.

For attachment of front-mounted implement to carrier vehicles

- Weidemann

Weight: 15,0 kg

Increased risk of injury
There is an increased risk of injury when the machine is being coupled to the carrier vehicle. Therefore:

- Secure the carrier vehicle so that it cannot roll away.
- The carrier vehicle must be fitted with an adaptor for the machine.
- Never stand between the carrier vehicle and the machine during coupling.
- Actuate the power lever slowly and carefully.

Failure to observe these instructions can result in serious or fatal injury.

If you want to mount the machine as a rear attachment, check whether your machine is equipped with a three-point holder for rear attachment. If not:

Machine for front mounting only
The machine is only allowed to be attached to the carrier vehicle at the front.
You can damage the machine if you mount it at the rear.

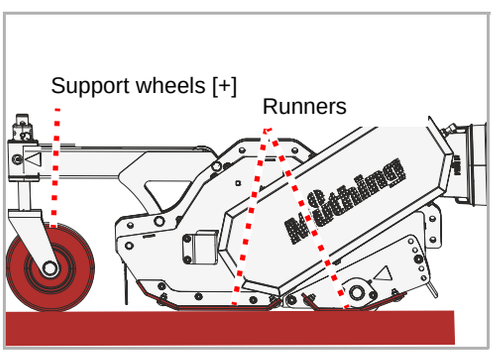

- ▸ Check that the machine is securely positioned. The support wheels and runners should be on the ground.

→ Chapter »Parking and storage« paragraph »Setting down the machine in a secure position«, page 52

If the machine is not securely positioned:

- ▸ Secure the machine with suitable lifting gear and move into the correct position

Implement triangles

Requirement: Your carrier vehicle is fitted with an implement triangle and the machine is fitted with the corresponding receiver.

- ▸ Drive the carrier vehicle up to the receiver on the machine so that it is centrally positioned.
- ▸ Lower the implement triangle on the carrier vehicle so that it fits under the receiver on the machine.
- ▸ Drive the carrier vehicle up to the receiver on the machine.
- ▸ Raise the implement triangle, making sure that it latches into the receiver securely.
- ▸ Secure the implement triangle in the receiver.

→ Implement triangle operating instructions

Three point linkage

Prerequisite: Your carrier vehicle is equipped with a three-point holder.

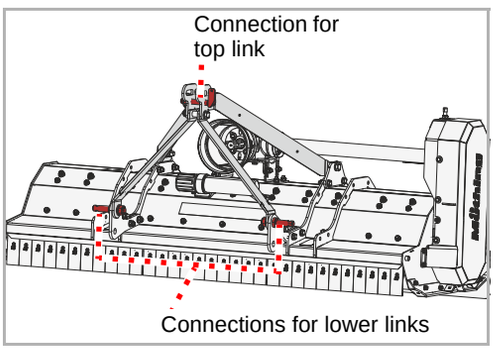

- Adjust both lower links on the tractor to the same height
- Connect the lower link according to the category of tractor and secure with split pin
- Connect the upper link according to the category of tractor and secure with split pin

Supporting leg

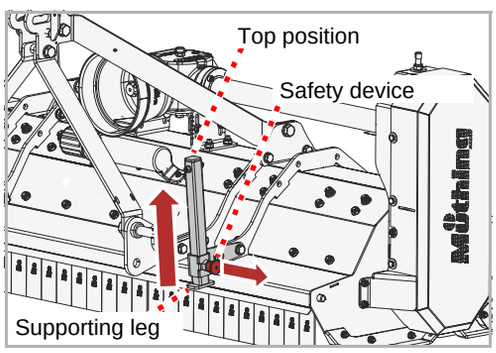

- Raise the machine slightly
- Pull out the retainer
- Pull the supporting leg upwards and lock in place in upper position with the retainer

Two-point-linkage

Prerequisite: Your carrier vehicle is equipped with the corresponding adapter arm.

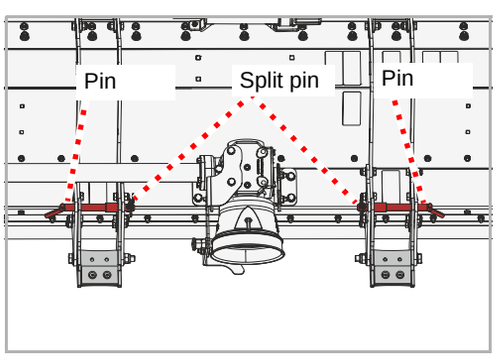

- Remove the split pins and take out the pins
- Drive the carrier vehicle centrally in front of the machine, making sure that the adapter arms are in the correct position relative to the machine.
- Align the adapter arms so that they fit into the receptacles on the machine
- Fix adapter arm with pin, secure pin with split pin

Yard loader

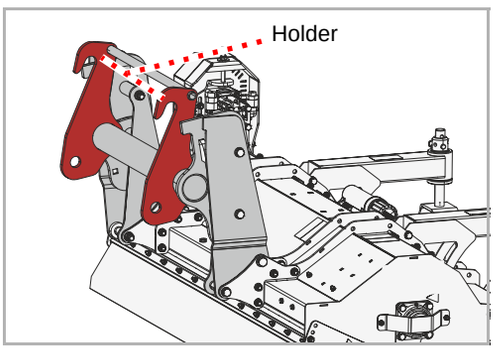

Prerequisite: Your carrier vehicle is fitted with the appropriate adapter.

- With the carrier vehicle centrally positioned, drive up to the machine, paying attention to the position of the adapter in relation to the machine.
- Align the yard loader so that the adapter fits into the holders on the machine
- Ensure that the adapter is locked and secure the adapter

→ Operating manual for yard loader

Mechanical drive

The PTO shaft has been adapted by your dealer in line with your carrier vehicle.

PTO shaft

Generally, the PTO shaft is already connected to the machine. If the PTO shaft is replaced or after maintenance work to the PTO shaft, it will be necessary to connect it to the machine.

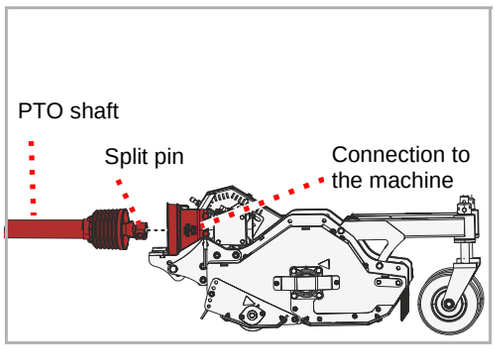

- Carefully clean and grease the PTO shaft and connection to the machine
- Push the PTO shaft onto the connection to the machine and ensure that the cotter pin locks into place on the PTO shaft

Connection to carrier vehicle

If you switch to a different carrier vehicle, you must check that the PTO shaft is the right length. It is particularly important when checking the PTO shaft to ensure that the two halves of the PTO shaft continue to overlap at the position in which the PTO shaft is pulled apart furthest.

If you switch to a different carrier vehicle, you must make sure that the PTO shaft is suitable for the new carrier vehicle. If necessary, you must swap the PTO shaft for a new one and have it adapted in a qualified specialist workshop.

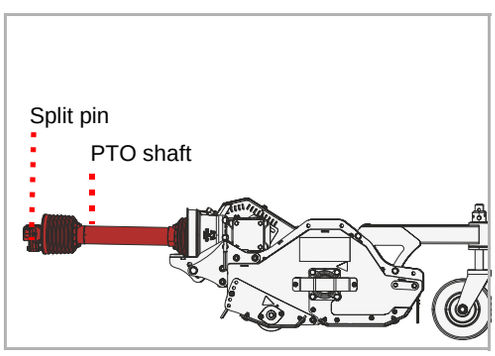

- Connect the propeller shaft to the PTO shaft of the carrier vehicle. Make sure that the split pin on the propeller shaft latches into place

Hydraulic drive

Function	Color of dust cap
Feed line	Green
De-pressurised return	Green
Depressurised leak-off oil line	Blue

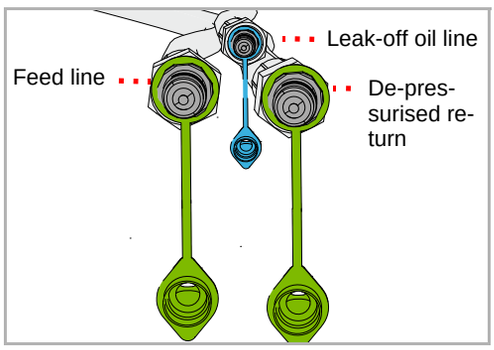

Machines with separate leak-off oil line:

- Connect the hydraulic hoses to the corresponding connections on the carrier vehicle

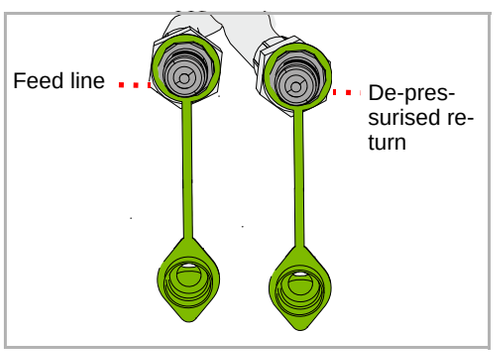

Machines with integrated overflow oil line:

- Connect the hydraulic hoses to the corresponding connections on the carrier vehicle

Working width

Without support wheels, the working depth can be adjusted in 11 mm steps. With support wheels, the working depth can be adjusted in 5 mm steps.
The optimal working depth for most applications is the middle setting.

Tools must not come into contact with the ground
Any contact with the ground could result in stones or other material not being held back safely by the stone guard.
Persons even outside of the hazard area could be injured by ejected material.

- Secure the carrier vehicle so that it cannot roll away.
- Raise the machine approximately 5 cm

Without support wheels

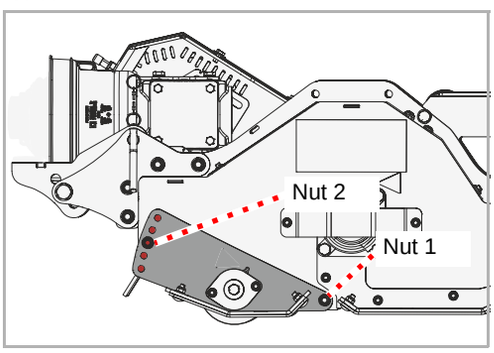

- Slightly loosen nut 1, but do not remove it
- Loosen nut 2, remove bolt and nut
- Also slightly loosen, but do not remove, nut 1 on the opposite side of the housing
- Also remove the bolt and nut 2 on the opposite side of the housing

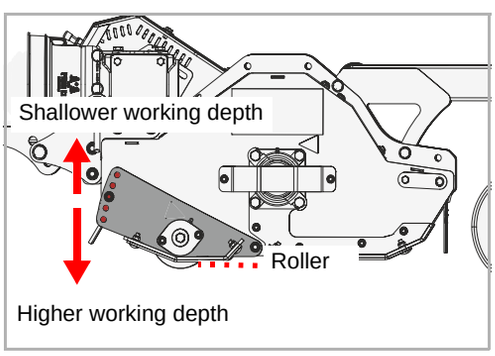

- Select the desired working depth and lift or lower the roller accordingly
- Insert bolt and nut 2, tighten nut 2
- Make the same adjustment on the opposite side of the housing.
- Tighten nut 1 on both sides of the housing again

With support wheels [+]

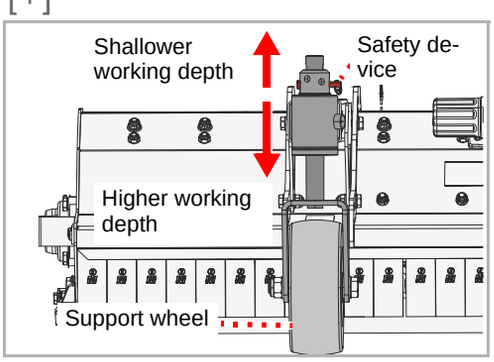

- Remove the safety clip on the pin, remove the pin
- Raise or lower the support wheel as required.
- Secure support wheel again with pin
- Re-secure the pin
- Make the same setting on the second support wheel.

Transport position

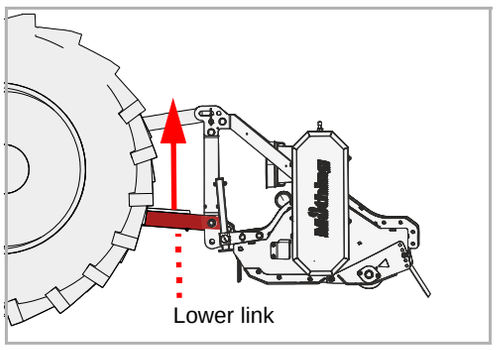

- Adjust the height of the lower links using the power lever of the carrier vehicle so that the machine is high enough for transport.
- Secure the control devices on the carrier vehicle so that they cannot be actuated accidentally.

→ Operating manual of carrier vehicle

Transport without coupling

For transport on, for example, a trailer, the machine can be raised. Only use the designated points for attaching the lifting device. The machine must be securely positioned.

- Setting down the machine in a secure position

→ Chapter »Parking and storage« paragraph »Setting down the machine in a secure position«, page 52

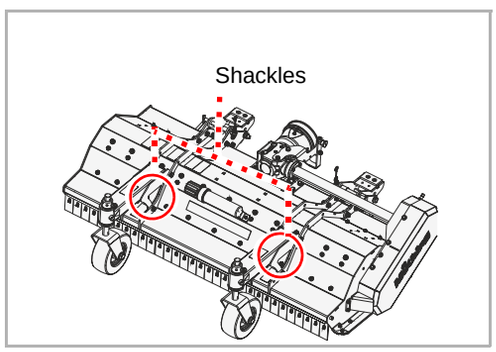

- Attach suitable lifting devices to the lifting eyes
- Raise the machine with suitable lifting gear and position on the loading bed
- Secure the machine against slipping

Settings

Assess the dust exposure levels
If the ground and the material to be mulched are dry, you may be exposed to dust. Dust exposure can be avoided by taking into account the direction of the wind. If dust exposure cannot be avoided, you can protect yourself by wearing a dust mask. If these measures are not sufficient, use a carrier vehicle with an enclosed cab and a dust filter.
Dust exposure may lead to respiratory diseases.

Only work forwards
The machine may only be located in work position when moving forwards. The machine must be raised up when reversing.
A machine in work position when reversing could result in serious damage to the machine.

Front attachment

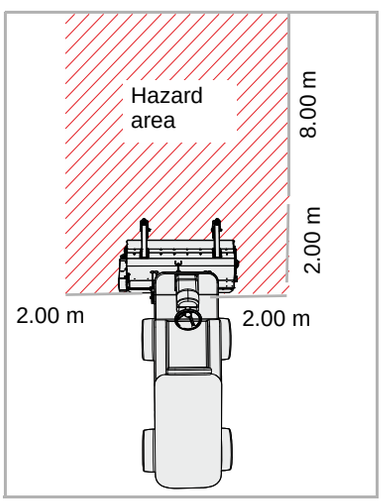

Check the hazard area
The hazard area in front of the machine is 8 m. It is 2 m at the sides. Before driving off, operating the machine and during operation, check its hazard area. Make sure that you have an adequate view. Do not begin work until the hazard area is cleared of any persons or objects. Parts could be ejected from the machine at high speed in certain circumstances. The hazard area, particularly in front of and behind the machine, must be cleared of any persons, animals or objects before starting.
Any use of the machine without verification of the hazard area can lead to serious or fatal accidents.

Rear attachment

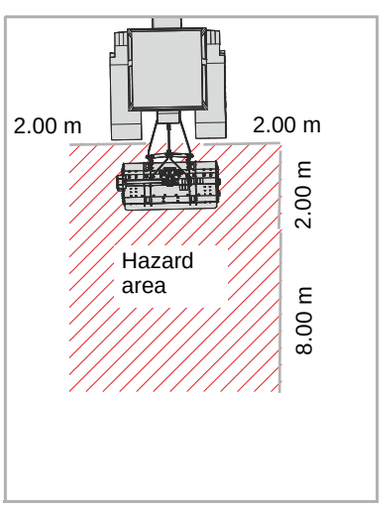

Check the hazard area
The hazard area rear of the machine is 8 m. It is 2 m at the sides. Before driving off, operating the machine and during operation, check its hazard area. Make sure that you have an adequate view. Do not begin work until the hazard area is cleared of any persons or objects. Parts could be ejected from the machine at high speed in certain circumstances. The hazard area, particularly in front of and behind the machine, must be cleared of any persons, animals or objects before starting.
Any use of the machine without verification of the hazard area can lead to serious or fatal accidents.

Particular care should be taken by the operator when working with the mulcher. Working on ditches, overhangs or slopes are activities which tend to be particularly hazardous. We can only give general instructions, the actual situation must be evaluated by the operator.

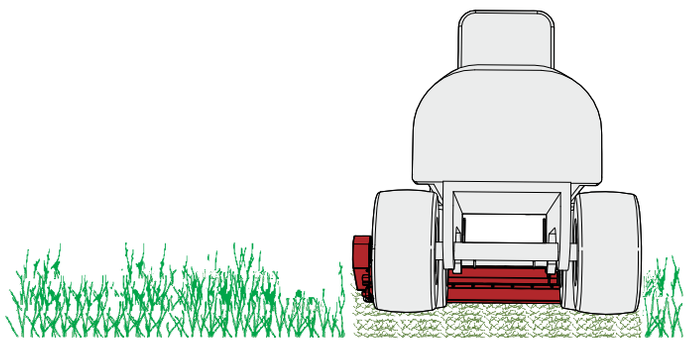

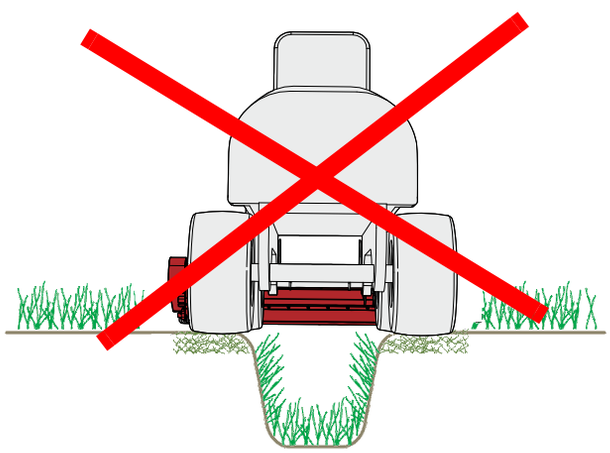

Do not lean the machine forwards
The machine must not lean forwards or backwards during work.
A machine that is leaning forwards or backwards can become clogged up and work incorrectly.

Three point linkage

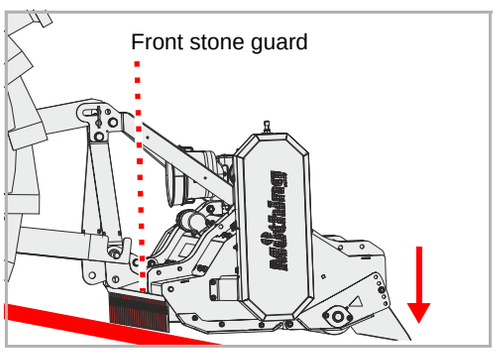

- Lower the machine using the carrier vehicle until the machine is on the ground. The front stone guard should be parallel to the ground.

In round hole

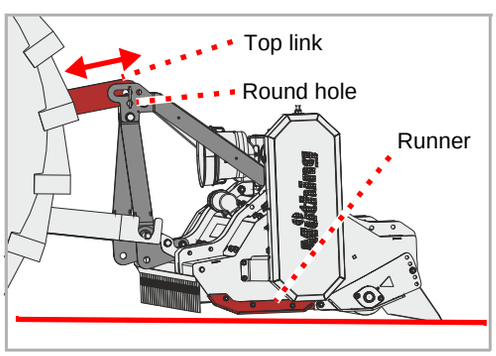

When mounting in the round hole, the machine can be adjusted more easily via the upper link, but cannot adapt to the ground contours.

- Adjust the machine so that the runners are parallel to the ground.

If the runners are not parallel to the ground:

- Use the upper link to adjust the machine so that the runners are parallel to the ground

- Place the control device on the carrier vehicle for the lower links into the floating position.

In slotted hole

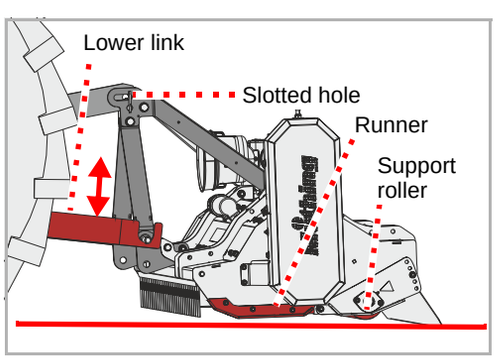

The machine can adapt to the ground contours when mounted in the slotted hole.

- Move the upper link from the round hole to the slotted hole
- Use the support roller and lower links to adjust the machine so that the runners are parallel to the ground
- Adjust the upper link so that the pin is in the centre of the slotted hole

Two-point-linkage

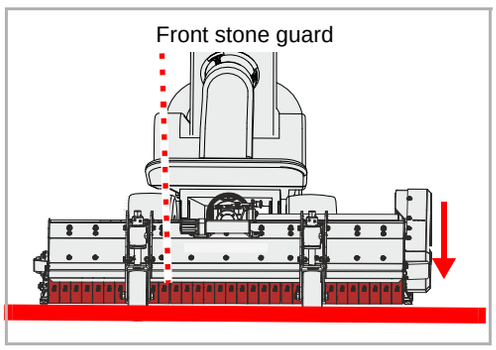

- Lower the machine using the carrier vehicle until the machine is on the ground. The front stone guard should be parallel to the ground.

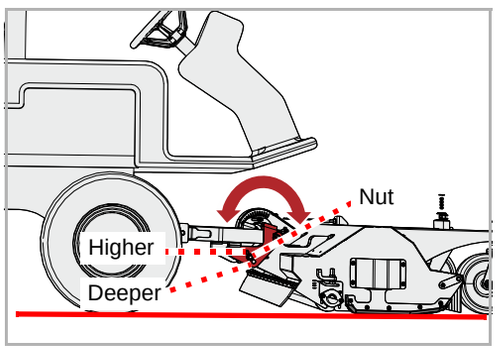

- Adjust the machine via the support roller and support wheels so that the runners are parallel to the ground. The lower links should be able to move freely in the holders of the machine.

If the lower links cannot move freely in the holders of the machine:

- Undo and remove the nut.
- Remove screw
- Lift or lower the machine over the carrier vehicle until the runners are parallel to the ground
- Replace the screw in the corresponding hole and secure with nut

- Place the control device on the carrier vehicle for the lower links into the floating position.

Yard loader

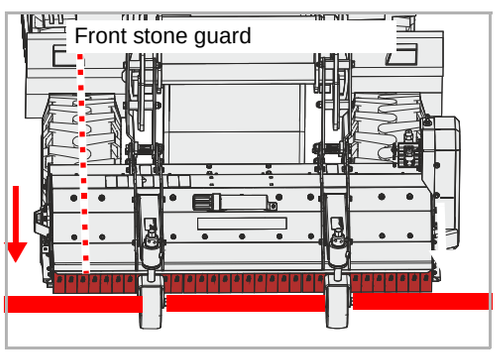

- Lower the machine using the carrier vehicle until the machine is on the ground. The front stone guard should be parallel to the ground.

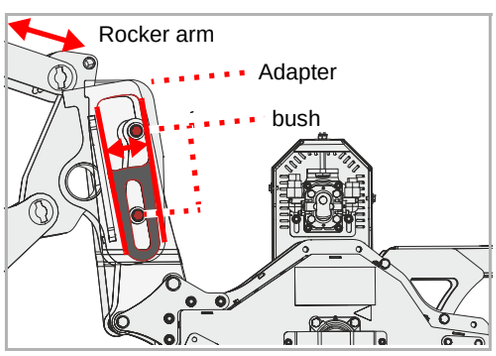

- Adjust the linkage of the yard loader so that the bushes are in the centre of the adapter

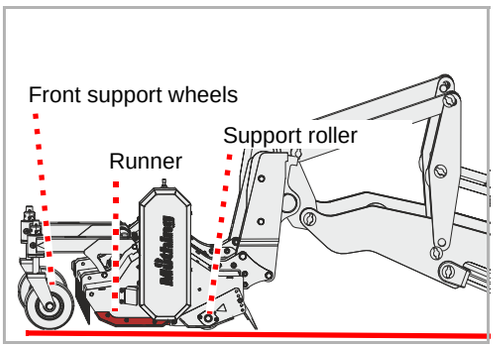

- Adjust the machine so that the runners are parallel to the ground.

If the runners are not parallel to the ground:

- Adjust the height of the front support wheels and the support roller so that the runners are parallel to the ground

Task

In the case of machines with a mechanical drive:

- Switch the PTO stub shaft into the work position and slowly bring the machine to the rated speed

In the case of machines with a hydraulic drive:

- In the work position, switch on the hydraulic drive and slowly bring the machine up to its rated speed.

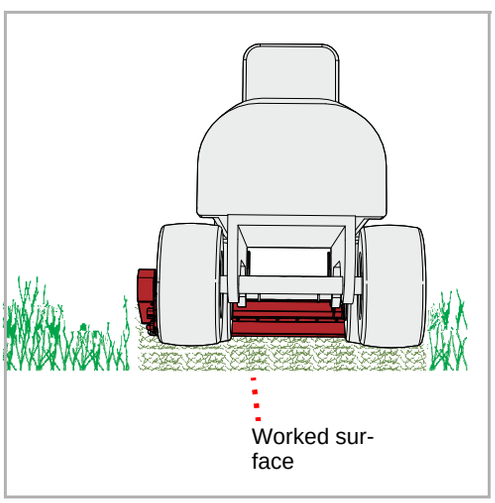

- Then drive at low speed into the stock, increase speed slowly. Pay attention to the machine while doing this.

If the machine is working too hard:

- Reduce speed

- Drive at a suitable speed. The speed must be appropriate to the growth and the type of terrain.

Cleaning

A high-pressure cleaner, for example, can be used to clean the machine. Never point the water jet directly at the labels or type plate.

Only use low pressure to clean the bearings
Clean the bearings and gear box using low pressure only.
The ingress of water shortens the service life of the bearings.

We recommend that you lubricate all bearings after cleaning. his forces any water which has found a way into the bearings back out and increases the service life of the machine.

Care

To ensure the machine's long service life, we recommend applying a protective coating of oil after the end of the season and during storage.

Use only approved and biodegradable oil, e.g. rapeseed oil.

Setting down the machine in a secure position

Ensure that there are no unauthorised persons can enter the set-down location
If the machine is set down either coupled to the carrier vehicle or uncoupled, you must make sure that it is protected so that unauthorised persons have no access to it.
Persons could be injured by coming into contact with parts of the machine or by manipulating the machine.

Select the set-down location carefully
The set-down location must be relatively even and the ground must be solid.
The machine may slip on sloping or soft surfaces. Persons can be injured by the machine slipping.

Requirements on the set-down location:

- Horizontal, solid surface
- Sufficient room on all sides
- Protected against access by unauthorised persons, such as children

Hydraulics

Increased risk of injury
There is an increased risk of injury when uncoupling the machine from the carrier vehicle. Therefore:

- Secure the carrier vehicle so that it cannot roll away.
- Never stand between the carrier vehicle and the machine during uncoupling.
- Actuate the power lever slowly and carefully.

Failure to observe these instructions can result in serious or fatal injury.

- ▸ Disconnect the hydraulic hoses from the connections on the carrier vehicle
- ▸ Protect the plug with the dust cap and lay it down on the machine

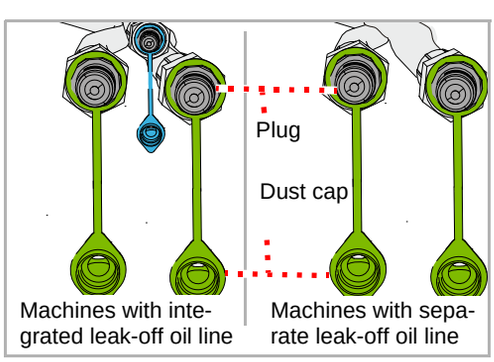

PTO shaft

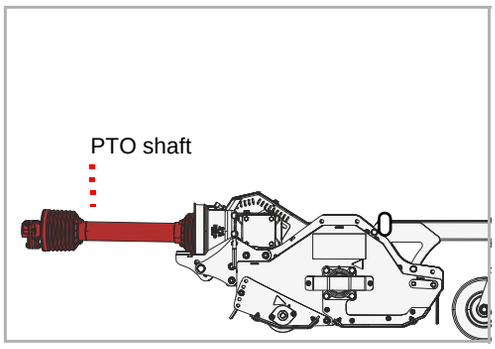

- Disconnect the PTO shaft from the carrier vehicle.
- Place the PTO shaft to one side

Coupling triangle

- Lowering the machine
- Undo the retainer between the implement triangle and the receiver

→ Implement triangle operating instructions

- Lower the implement triangle
- Slowly remove the carrier vehicle from the machine

The machine is now safely set down.

Three point linkage

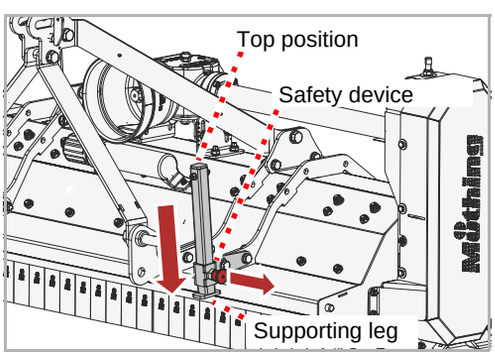

- Raise the machine slightly
- Pull out the retainer
- Slide down the supporting leg and lock it in place in the lower position with the retainer
- Lowering the machine

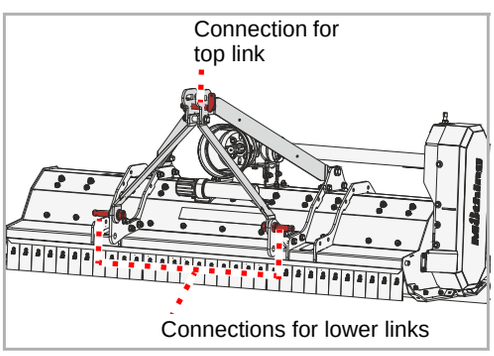

- Loosen the upper link and lower link on the machine
- Slowly remove the carrier vehicle from the machine

The machine is now safely set down.

Two-point-linkage

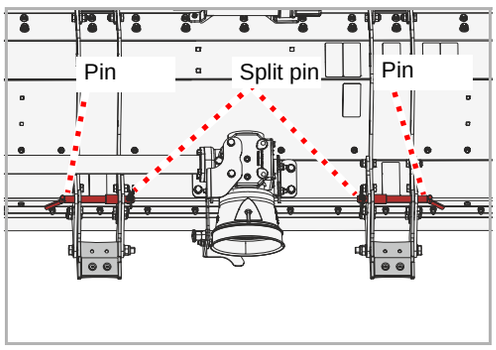

- Lowering the machine
- On both sides, remove the split pins and the pins
- Slowly remove the carrier vehicle from the machine
- Replace the pin and secure with the split pin

The machine is now safely set down.

Yard loader

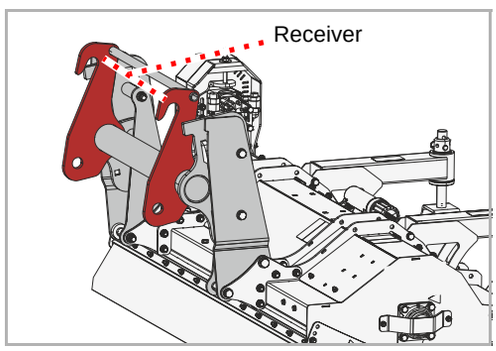

- Lowering the machine
- Loosen the coupling points on the linkage of the yard loader

→ Operating manual for yard loader

- Slowly remove the yard loader from the machine

The machine is now safely set down.

Storing the machine

After cleaning, the machine should be stored in transport position in a dry location and on a level and stable surface.
→ Section »Setting down the machine in a secure position«, Page 52

Apply a protective coating of oil during storage. Use only approved and biodegradable oil, e.g. rapeseed oil.
→ Chapter »Cleaning and care«, starting at page 51

For your safety

Special safety instructions



Requirements for conducting maintenance work
Only perform the maintenance work if you have the required expert knowledge and suitable tools.
A lack of specialist knowledge or the use of unsuitable tools can cause accidents.

Protect the machine from being started up accidentally
If the machine is coupled, only carry out repair and maintenance work and only rectify malfunctions on it if:

- The PTO stub shaft is off
- The engine is switched off
- The ignition key is removed

Serious accidents may be caused if the machine starts accidentally.



Welding work
Welding work is only allowed to be carried out by persons trained in welding who also have specialist knowledge of repairing landscaping machinery. Welding work which negatively impacts the machine's construction is prohibited.
Incorrect welding work could impair or destroy the machine's function. If in doubt, contact your dealer before carrying out any welding work.

Use replacement parts with identical properties
Many components have special properties that are essential for the stability and correct operation of the machine.
When replacing components, dimensions, stability and material quality must be guaranteed. We recommend the exclusive use of original replacement parts.
Use of replacement parts which do not correspond to requirements could cause damage to the machine or impaired performance.

Protective measures when handling oils or lubricants

Additives in oils and lubricants may have adverse effects on health. Since the hazardous material code does not require any special identification, please always observe the following:



Avoid skin contact
Avoid skin contact with these materials.
Contact can result in skin damage.

Protect your skin
When handling oils and lubricants, protect your skin with lotion or wear oil-resistant gloves.
Oils can be hazardous to your health.

Do not use oils for cleaning
Do not use oils or lubricants to clean your hands.
Swarf and abraded material in these materials can also result in injuries.

Change out of soiled clothing
Change out of clothing that is heavily soiled with oil as soon as possible.
Oils can be hazardous to your health.



- Collect old oil and dispose of it in accordance with statutory regulations.
- If your skin becomes irritated by oil or lubricants, contact a doctor immediately.

General information

This information relates to general maintenance work. For all maintenance work, the machine must be locked in the work position. If it is necessary to put the machine in its transport position for maintenance work, you will see an appropriate reference in the maintenance instructions.



Working with the grease gun:
One or two strokes with the grease gun are sufficient for lubrication. If you feel resistance during the second stroke of the grease gun, do not complete it.
Too much grease will force the bearings apart. This could allow dust and dirt to enter the bearing, resulting in premature wear.

Fundamentals

The following table contains a brief explanation of the most important terms used for maintenance.

Task	Version
Greasing	• Apply grease to the slide surfaces using a brush
Lubrication	• 1 - 2 Unless specified otherwise, one or two strokes with the grease gun provide sufficient lubrication
Oiling	• Unless otherwise specified, use only vegetable-based oil such as rapeseed oil • Mineral oils are not suitable • The use of used oil will endanger your health and is also strictly prohibited
Replacement	• Replace the component in question according to the instructions in the »Maintenance« chapter
Check	• An inspection may be required in conjunction with the replacement of the component in question
Observe the maintenance intervals	• All information is based on average machine usage • In the case of heavy usage (e.g. contract work), shorten the maintenance intervals accordingly • Shorter maintenance intervals may also be required under extreme working conditions (e.g. heavy dust generation)

Screwed connections

Retighten screws

All bolts must be retightened:

- After the first hours of operation
- According to the frequency of use
- But at least once a season

General tightening torques

Tighten all screwed connections in accordance with the information in the table. If different tightening torques are necessary, they are specified in the chapter »Maintenance«. The minimum quality of the bolts is 8.8.

Bolt size	Quality of the bolts		
	„8.8“	„10.9“	„12.9“
	Tightening torques in Nm		
M6		14	17
M8	24	34	41
M10	48	68	81
M12	85	120	145
M16	210	290	350
M20	425	610	710
M24	730	1050	1220

Maintenance intervals and setting work

The information relates to average usage under the machine's normal operating conditions. Maintenance intervals are shorter for heavy usage, such as with hire companies, or for extreme operating conditions such as very dusty environments.

	After the first hours of operation	After 8 operating hours	After 25 hours of operation	After 50 hours of operation	Once per season	As required	In case of wear	grease / oil / lubricate	Check	Replacement	Cleaning
General											
Retighten all screws	•					•					
Visual inspection	•	•									
Bearing		•				•		•			
Pivots		•							•		
Hydraulics											
Hydraulic hoses Every 6 years										•	
Hydraulic hoses General						•	•			•	
Hydraulic cylinder		•		•		•		•	•		
Tools											
Fastenings on the rotor		•				•			•		
Condition, wear		•				•			•		•
Other											
Position of rotor		•				•		•			
Roller bearing		•				•		•			
Shafts and pins			•			•		•			
PTO shaft Protective cover		•				•		•	•	•	•
		•				•		•	•	•	•
Transmission oil		•				•			•		
					•	•				•	

Lubricating work

Lubricate bearings

The bearings must be lubricated regularly. Lubricate only with one or two strokes from the grease gun:

- According to the maintenance chart
- After heavy use
- But at least once a season

Bearings that require no maintenance must not be lubricated.

Overview of lubrication points

S = lubrication point

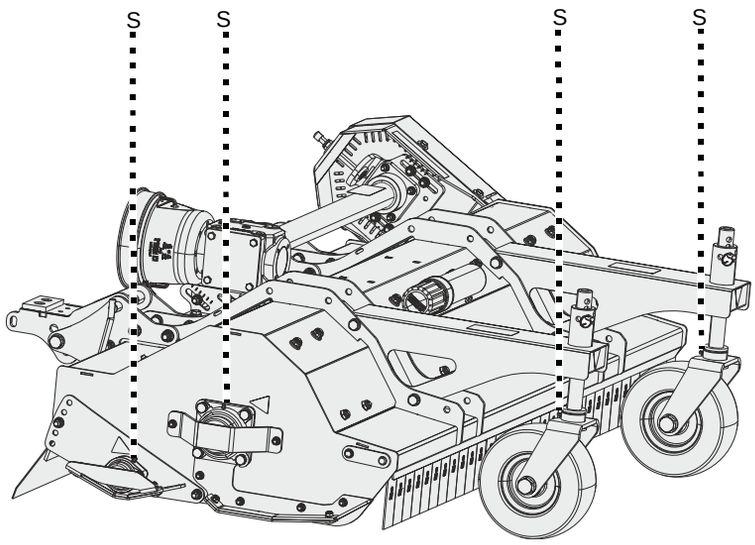

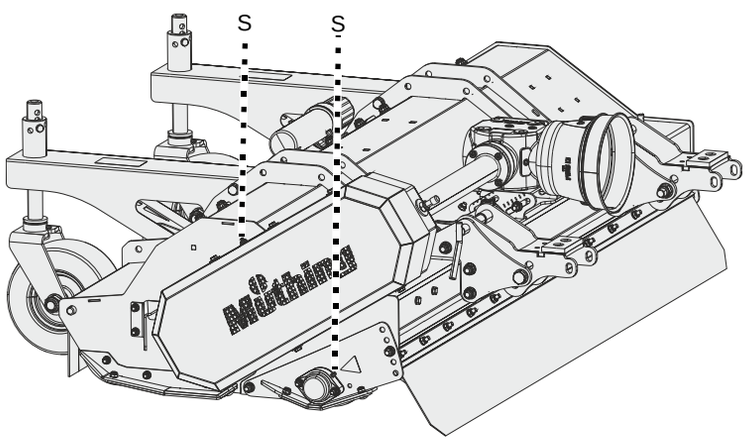

Other lubrication points

The following applies:

- In addition to the lubrication points shown in this operating manual, your machine may have other lubrication points
- As a rule, lubrication points are located at pivots or bearings. Therefore, inspect your entire machine for any such additional lubrication points.

The location of the lubricating nipple is usually shown on one component as an example. If multiple components of this kind exist, the lubricating nipples have to be lubricated at each of these components.

PTO shaft

The PTO shafts are heavily stressed. This means that regular maintenance is decisive for the PTO shafts' service life. Only the most important work is shown here.
Full maintenance work on the PTO shaft:
→ PTO shaft operating manual

Checking

Daily

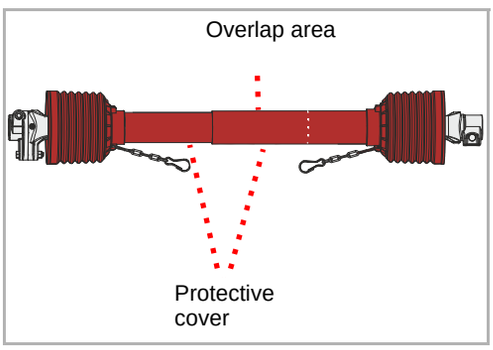

- Check the PTO shaft for contamination and clean if required. Dust in conjunction with oil and grease results in increased wear

If the PTO shaft is heavily contaminated:

- Clean PTO shaft
- Grease the interior of the overlap area of the protective cover

→ PTO shaft operating manual

- Check protective cover for damage

If the protective cover is damaged:

- Replace protective cover

→ PTO shaft operating manual

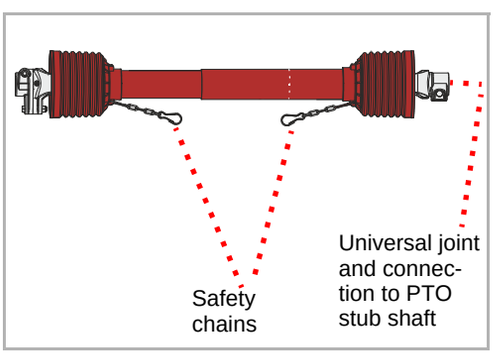

- Check presence and correct function of safety chains

If the safety chains are not present or are heavily worn:

- Replace the safety chains

→ PTO shaft operating manual

- Check the PTO shaft for wear in the universal joints and at the connection to the PTO stub shaft

If the universal joints are worn:

- Replace the universal joints

→ PTO shaft operating manual

Lubrication

Every 50 hours of operation

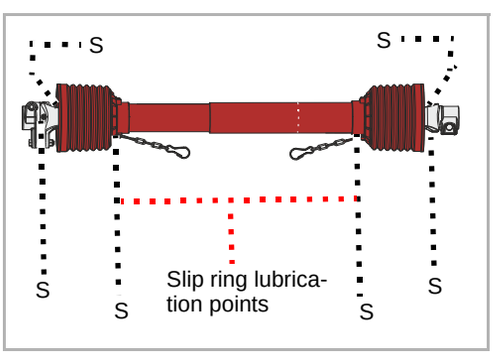

In case of heavy usage or in extreme operating conditions, such as a very dusty environment, more frequent lubrication is required.

- Lubricate in the universal joint with 1 - 2 strokes of the grease gun.
- Lubricate on the slip rings with 1 - 2 pumps of the grease gun

For wide-angle PTO shafts:

The wide-angle joint contains a lubricant reserve which must be filled with 400-500 g [14-17 OZ] of grease.

- Lubricate with at least 5-6 pumps of the grease gun

→ PTO shaft operating manual

Transmission oil

The gearbox oil must conform to the specification.
→ Chapter »Familiarising yourself with the machine« paragraph »Technical specifications«, page 27

Check

Twice per season

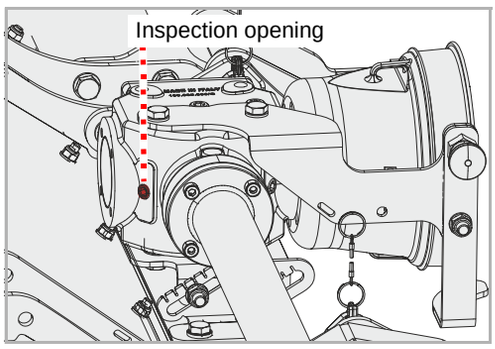

- Loosen the screw on the inspection and remove the screw
- Check the oil level. The oil level must reach the lower edge of the inspection opening.
- Retighten the screw at the inspection opening

Refilling

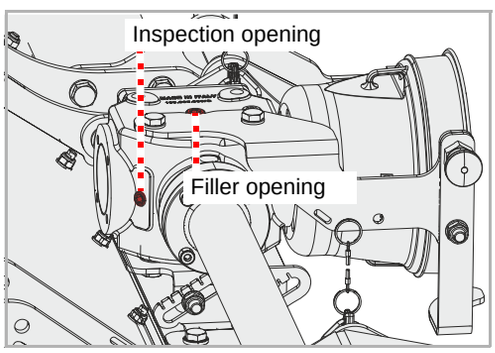

- Loosen the screw on the inspection and remove the screw
- Loosen the screw on the filler opening with an Allen key and remove the screw.
- Use a funnel to fill with gear oil of the appropriate specification until the oil level reaches the lower edge of the inspection opening
- Retighten the screw at the inspection opening
- Retighten the screw at the filler opening

Replacement

1x per season

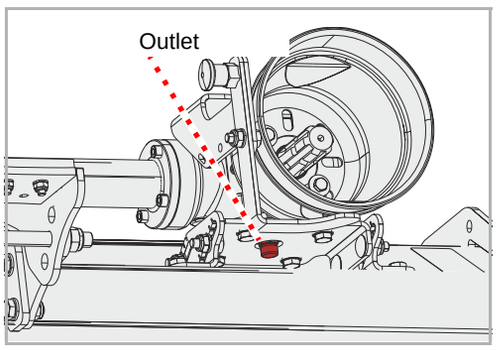

- Place a collection container under the outlet for the waste oil

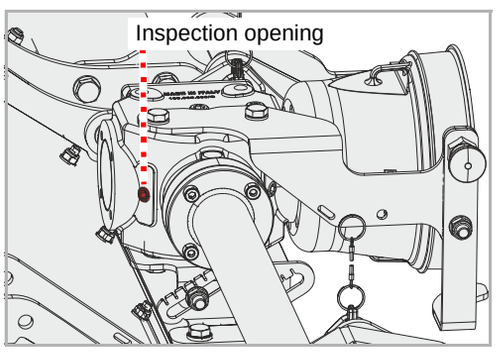

- Loosen the screw on the inspection opening.
- Loosen the screw on the outlet with a hexagon key and remove the screw
- Allow the oil to drain out fully
- Screw the screw on the outlet back in.
- Refill with new gear oil

→ Section »Refilling«

Tools

As required

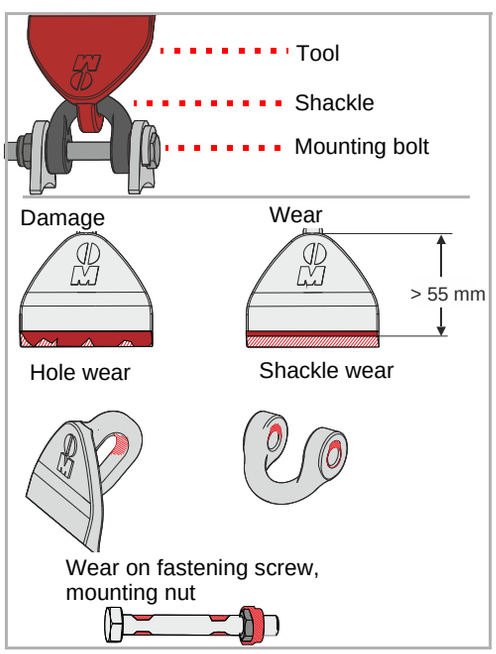

The tools must be replaced if they:

- Are damaged
- Heavily worn (length of tool less than 55 mm)
- The bore on the tool is worn
- The shackle is worn
- The fastening screws or the fastening nuts are worn

It is important that the rotor runs without unbalance. Therefore:

- Always replace tools with the same type
- Always replace tools opposite each other at the same time
- In case of wear it is best to replace the entire set of tools

Secure the machine
Work can only be carried out on a machine secured against rolling away and dropping. To prevent dropping, for example, permitted and correctly dimensioned support legs can be used.
If the machine is not secured against rolling away and lowering, serious or fatal accidents could result.

New tools – New bolts, nuts and shackles
When replacing the tools, the nuts, bolts and shackles must also be replaced at the same time.
If the nuts and bolts are not replaced, the worn bolts may break. Tools may become detached during work and be flung out. Even persons outside of the hazard area could be seriously injured or killed.

Sharp tools
The tools can be very sharp. Work very carefully and wear protective gloves when working on the tools.
Cut injuries can result if you do not work carefully or work on the tools without protective gloves.

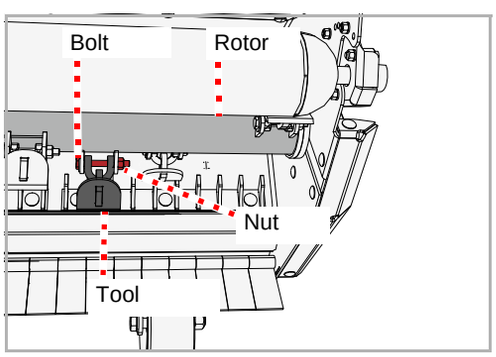

- Secure the machine against rolling away and dropping
- Loosen the nuts and remove the bolts
- Remove old tool
- Insert the new tool in the same way.
- Fit a new screw and secure with a new nut

V-belt

As required

The V-belt is tensioned by a counterweight. If the V-belt is not sufficiently tensioned, it must be retensioned. If there are any tears or the V-belt is damaged, it must be replaced.

Checking

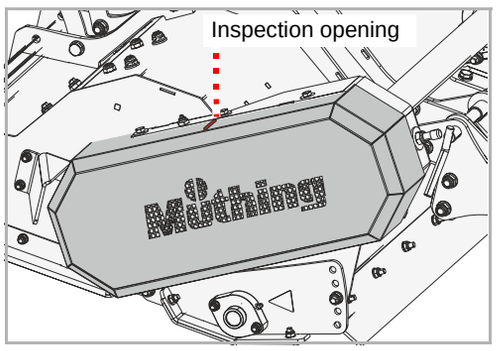

There is an inspection opening on the machine.

- Check the tension of the V-belt. The drive belt must not be able to be pushed through more than10 mm under a load of 6 kg.

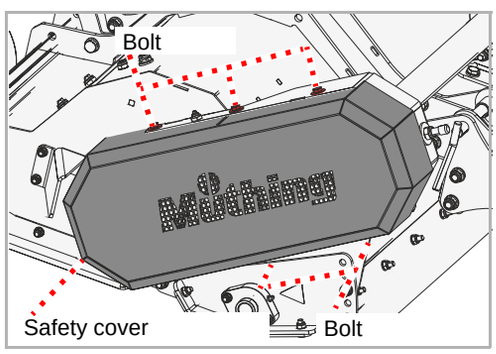

- Remove the screws, remove the safety cover.
- Check the V-belt for damage
- Reassemble the safety cover

Tensioning

There are markings on the slide and on the holder on the side of the gear box. These allow you to document the position before tensioning. After tensioning, you can make the first adjustments using these positions.

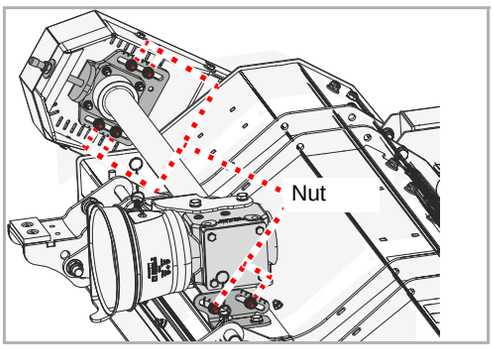

- Loosen the nuts but do not remove them.

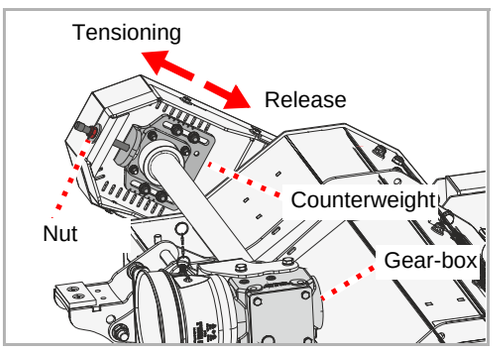

- Use the nut to set the V-belt tension as required via the slide
- Retighten the nuts on the slide
- Retighten the nuts on the holder on the side of the gear box

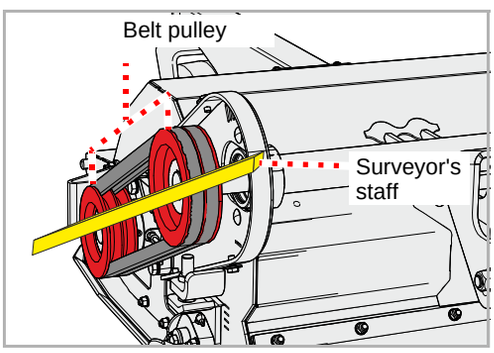

- Check the alignment of the drive belts. Use a surveyor's staff or similar. The gauge must lie flat on both pulleys and be in alignment.

If the surveyor's staff does not lie flat:

- Loosen the nuts on the holder
- Also loosen nuts on the opposite side
- Align the rear belt pulley by moving the gear box so that the measuring bar lies flat on both belt pulleys
- Tighten the nuts on the holder again

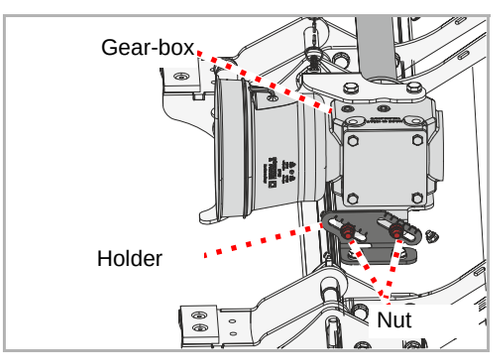

- Check the V-belt tension

Replacement

If there are any tears or other damage on the V-belt, it must be replaced.

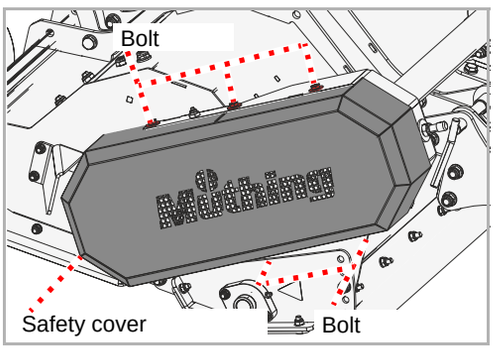

- Remove the screws, remove the safety cover.

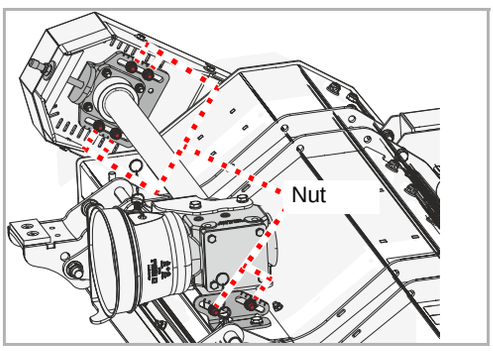

- Loosen the nuts but do not remove them.

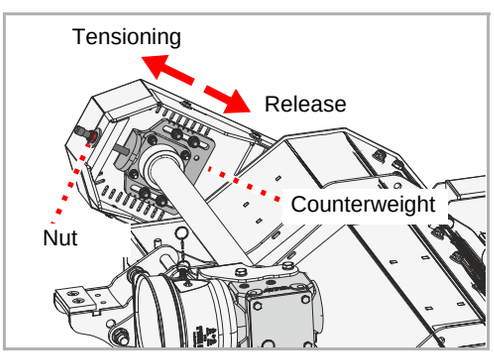

- Release the drive belt tension via the slide at the nut

The drive consists of two V-belts.

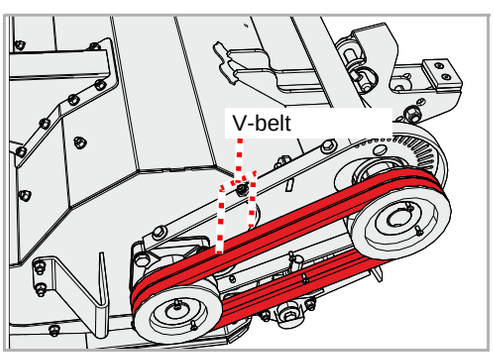

- Remove the old V-belts.
- Fit the new V-belts
- Check the V-belt for correct positioning
- Tension the V-belt

→ Section »Tensioning«, Page 67

- Retighten the nuts on the slide
- Retighten the nuts on the holder on the side of the gear box
- Reassemble the safety cover

Runners

As required

The runners protect the machine from direct contact with the ground. If they are not replaced in good time, the housing of the machine will be damaged.

Secure the machine
Work can only be carried out on a machine secured against rolling away and dropping. To prevent dropping, for example, permitted and correctly dimensioned support legs can be used.
If the machine is not secured against rolling away and lowering, serious or fatal accidents could result.

Runners

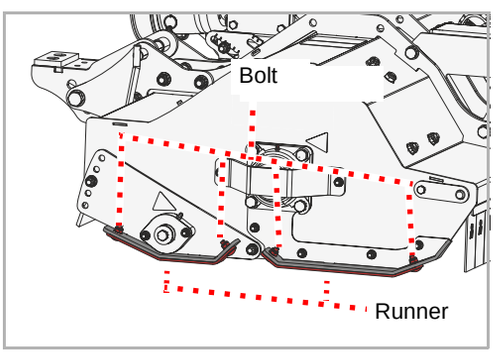

There are runners on the right-hand side and left-hand side.
The runners on each side are split and consist of front and rear runners.

- Undo nuts, remove screws and washers.
- Remove old runner
- Fit new runner
- Fit new screws and washers
- Secure screws with new nuts

If the runners also need to be replaced on the opposite side:

- Replace the runners on the opposite side as well.

Wear insert

A metal insert protects the housing from wear.

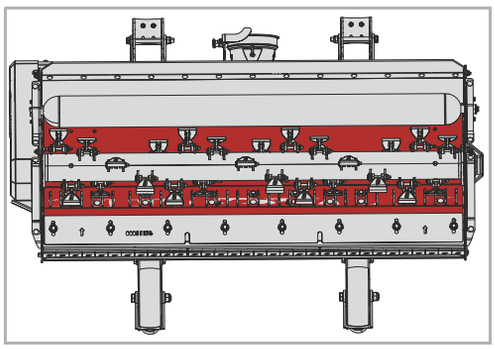

short-chopping bar

A second counter-cutter optimises the material feed. This produces better cutting. This produces better cutting.

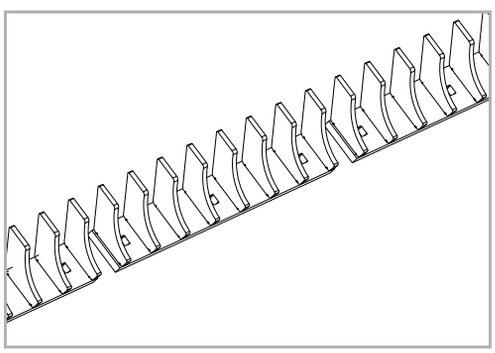

Cutting bar

The cutting bar allows you to adjust the rate of shredding. You can use it to determine how finely the mulch should be shredded.

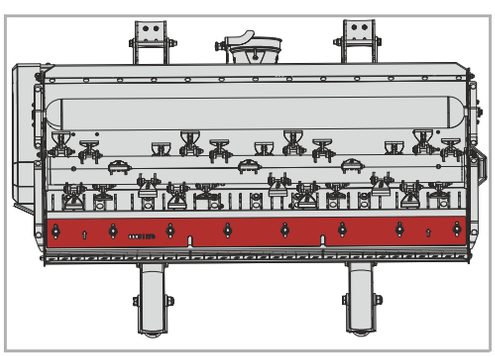

Pressure relief valve

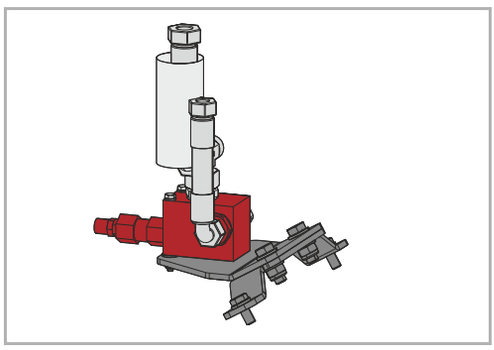

Pressure relief valve for high operating pressures of the carrier vehicle. Installation and adjustment to the carrier vehicle must be carried out by a specialised company.

- 17cc motor 230 bar
- 20cc motor 200 bar
- 26cc motor 180 bar

Support wheels

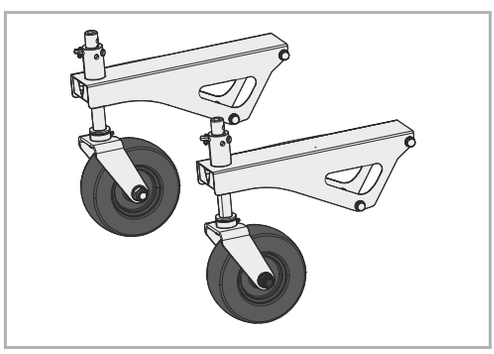

Support wheels are available for comfortable depth guidance.

Operating hours counter

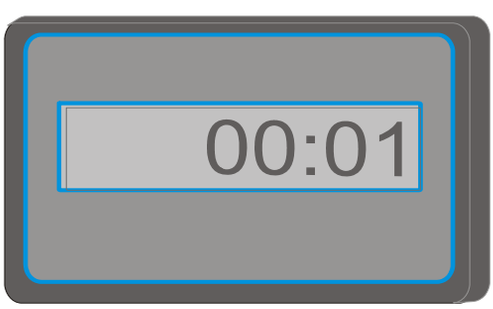

An electronic operating hours counter displays the actual operating duration. This means that data can be recorded precisely and used, for example, for calculations.

Fault elimination

Faults can often be eliminated quickly and easily. In the event of hydraulic problems, first check:

- Are the hydraulic hoses properly connected?
- Is the control valve on the carrier vehicle defective?
  If so, contact your dealer.
- Is the hydraulic pump of the carrier vehicle defective?
  If so, contact your dealer.

Before calling Customer Service, refer to the table below to check whether the fault is one you can eliminate yourself.

Fault	Cause	Remedy
Strong vibrations and high noise development	Tools are worn	Replace the tools
	One or more tools are missing	Replace tools
	Tools are damaged	Replace the tools
	Bearings for the rotor are worn	Have the bearings replaced
	Foreign bodies, such as wire, are wound around the rotor	Remove foreign bodies
	Tools have become loose	Tighten nuts on screws
	Speed of rotation of the PTO stub shaft is not set correctly	Set the correct speed of rotation on the PTO stub shaft
	Rotor not correctly counterbalanced	Have the balancing checked by a qualified specialist workshop and rebalance the rotor if necessary
Tools wearing quickly	The tools are working too deeply	Set correct working depth
Material cut too rough and cut material not distributed evenly	Drive speed too high	Reduce the drive speed
	The tools are working too deeply	Set correct working depth
	The tools are working too high	Set correct working depth
	V-belt worn	Replace V-belt set
	V-belt not correctly tensioned	Check V-belt tension and retension if necessary
	The speed of the PTO stub shaft of the carrier vehicle is too low.	Increase the rpm
	Tools are worn	Replace the tools
	The machine is not standing parallel to the ground	Adjust the machine correctly

Fault	Cause	Remedy
Rotor does not turn	Rotor is blocked by a foreign body	Remove foreign bodies
	The PTO shaft is free-wheeling or the gear box is incorrectly assembled.	Have the free running state correctly assembled
With hydraulic drive:	Fault in the hydraulic system	Have the fault identified and rectified by a specialist workshop
PTO shaft rotating, rotor is not	V-belt torn	Replace the V-belt
	Breakage in the drivetrain	Find the fault and replace the defective drive element
	Hydraulic drive: Hydraulic motor defective	Replace hydraulic motor
Unusual noises from the PTO shaft	Insufficient lubrication	Lubricate the PTO shaft
	Unequal deflection angles of the PTO shaft	Check alignment of the machine to the carrier vehicle
	Excessive offset of the PTO shaft	Reduce lift height or lowering depth
Gear box overheating	Incorrect oil specification	Change oil and select oil with correct specification
	Oil too old	Change oil
	Oil level too low	Fill the oil to the lower edge of the inspection opening
	Oil level too high	Drain the oil to the lower edge of the inspection opening
	Machine overload	Maintain rpm in correct region, adjust driving speed to suit the work, maintain performance area (avoid excessively heavy growth or excessively thick branches)
High wear on V-belts V-belts running hot Power transmission not optimal	The tools are working too deeply and touching the ground	Set correct working depth
	Pulleys not aligned in parallel	Have pulleys correctly aligned
	V-belt is worn	Replace the V-belt
	V-belt is not correctly tensioned	Check the tension jack
Oil leaking from the gear box	Sealing rings worn or damaged	Have sealing rings replaced
	Oil level too high	Drain the oil to the lower edge of the inspection opening
	Breather defective	Replace breather

Fault	Cause	Remedy
Drive elements broken	Machine was started up abruptly or is blocked by foreign bodies	Have defective drive element replaced. Start the machine up slowly.

When the service life of your machine is over, it must be disposed of properly. Please observe currently valid disposal regulations.

Metal parts
All metal machine components can be sent for metal recycling.

Plastic parts
All plastic parts are marked and can be recycled.

Oil
Collect fluid from the hydraulic system in a suitable container and dispose of at a used oil collection facility.

EU-conformity declaration

EC Directive 2006/42/EG

Müthing GmbH & Co. KG Soest
Am Silberg 23
D-59494 Soest

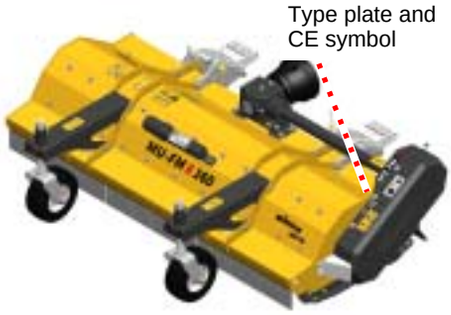
Type plate and CE symbol

assumes sole responsibility for declaring that the following product complies with EC Directive 2006/42/EC:

MU-FM Vario and additional equipment

Assorted samples of harmonized standards:

- DIN EN ISO 4254-1
- DIN EN ISO 4254-12
- EN 13524

Soest, 27.09.2024

Andreas Rohde
CEO and authorised person for compiling technical documentation

Copy of the type plate/serial number entry

Machine type: Flail mower

Model:

Working width:

Serial number:

Year of construction:

UK Declaration of Conformity

UKCA

Müthing GmbH & Co. KG Soest
Am Silberg 23
D-59494 Soest
Germany

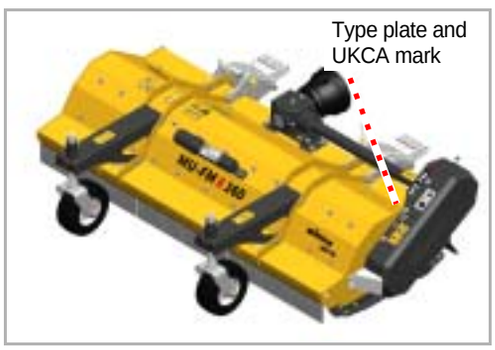

declares under sole responsibility that the machine conforms with the following directives:

- Supply of Machinery (Safety) Regulations 2008

Assorted samples of harmonized standards:

- BS EN ISO 4254-1
- BS EN ISO 4254-12
- BS EN 13524

Machine designation	MU-FM Vario and additional equipment

The special technical documents corresponding to the machine have been created according to Annex VII, Part B.

Soest, 27.09.2024

Andreas Rohde
CEO and authorised person for compiling technical documentation

Copy of the type plate/serial number entry

Type of machine: Mulcher

Model:

Working Width:

Machine ID:

Production Year:

Index

A

Accessory 70
- Cutting bar 70
- Operating hours counter 71
- short-chopping bar 70
- Support wheels 71
- Wear insert 70

Adjustments before mulching 46
Assembly 24

C

Care 51
Centre of gravity 16
Cleaning 51
Coupling 39

D

Declaration of Conformity 76
Direction information 14

E

Employer 8

F

Fault 72
Features 23

I

Instruction 8

L

labels, see warning signs
Lubricate bearings 60

M

Machine
- Storing 54

Maintenance
- General information 56
- Maintenance intervals 59
- Overview of lubrication points 61
- Safety 55

P

Parking 52
Pictograms 9
Protective procedure
- Oils or lubricants 56

R

Range of application 22
- Carbide M shackle flails 22

S

Safety 10
- Agricultural training 14
- Altered driving and braking behaviour 18
- Care and maintenance intervals 20
- Care and maintenance work 20
- Centre of gravity 16
- Check the screwed connections 21
- Cleaning 20
- Coupling 15
- Proper use 22
- Putting the machine into operation 18
- Riding on the machine 18, 19
- Total weight 16
- Uncoupling the machine 19
- Warning signs 10
- Welding work 21

Scope of delivery 29
Screwed connections 58
Setting down the machine in a secure position 52
Symbols 9

T

Target group 8
Technical specifications 27
Tightening torques
- General 58

Transport
- Transport position 45
- Transport without coupling 45

Transport without coupling 45

W

Warning signs 10
- Meaning 12

Working width 44